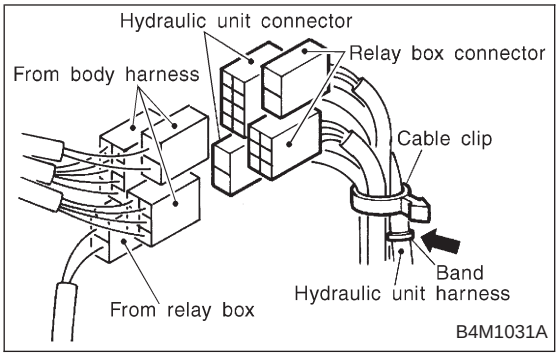

2) Secure relay box connector to connector bracket.

CAUTION:
Align connector wit mating receptacle.

3) Using cable clip, secure hydraulic unit harness to relay box harness.

CAUTION:
Make sure hydraulic unit harness band is secured beneath cable clip.

4) Connect connector to relay box.
5) Install canister.
6) Install air intake duct.
7) Connect ground cable to battery.

16. ABS Control Module (ABS 5.3 Type)

A: REMOVAL

1. LHD MODEL

1) Turn ignition switch to OFF.
2) Remove front pillar lower trim.
3) Remove glove box.
4) Remove glove box bracket.

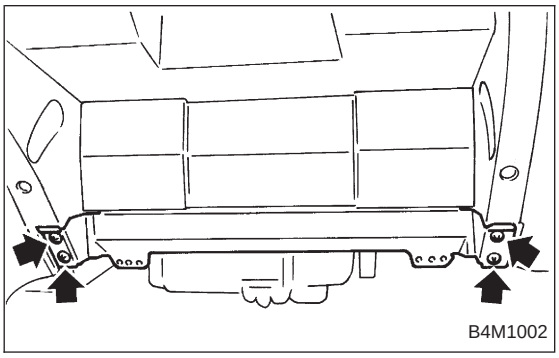

5) Remove pocket back panel.

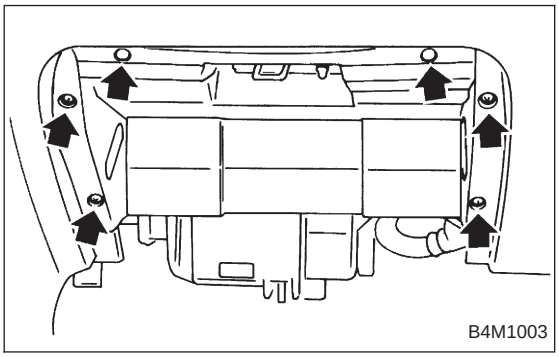

6) Remove bolt from bracket.

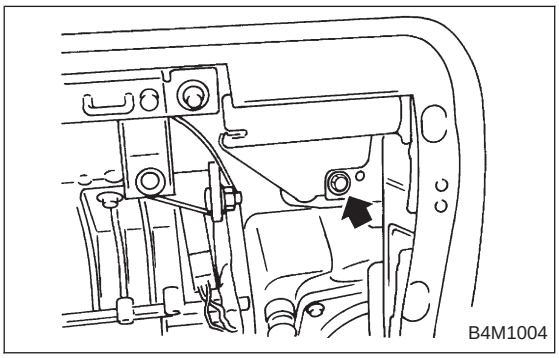

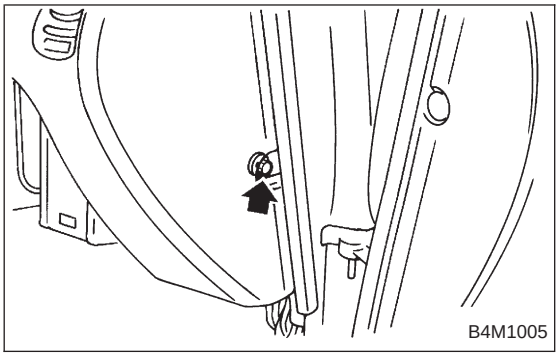

7) Remove bolt cover and bolt.

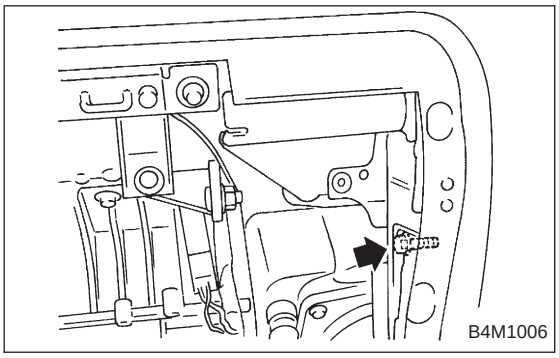

8) Remove ABSCM upper mounting bolt.

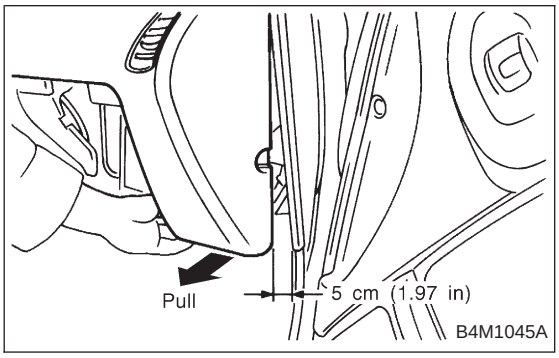

9) Pull the lower part of the instrument panel rearward 5 cm (1.97 in).

CAUTION:
When pulled more than 6 cm (2.4 in), the instrument panel may be deformed.

NOTE:
At this time, instrument panel securing clips can be removed.

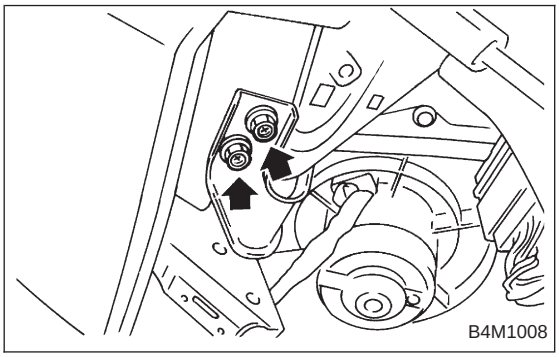

10) Remove two ABSCM lower mounting bolts from the lower part of the instrument panel.

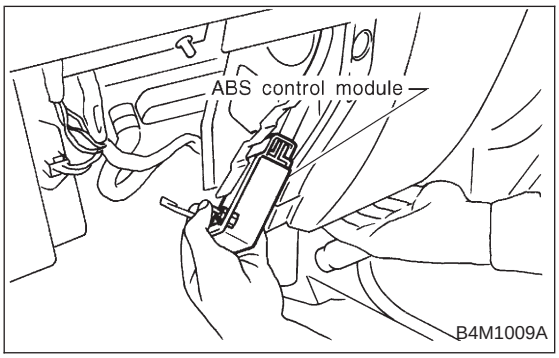

11) While holding the lower part of instrument panel rearward 5 cm (1.97 in) remove the ABSCM.

CAUTION:
When pulled more than 6 cm (2.4 in), the instrument panel may be deformed.

12) Disconnect connector from ABSCM.

CAUTION:
Do not drop or bump ABSCM.

B: INSPECTION

Check that connector is connected correctly and that connector terminal sliding resistance is correct.

C: INSTALLATION

To install, reverse the removal procedure.

17. G Sensor for ABS System (ABS 5.3 Type)

A: REMOVAL AND INSTALLATION

1) Turn ignition switch to OFF.
2) Remove console box. <Ref. to 5-4 [W1A0].>
3) Disconnect connector form G sensor.

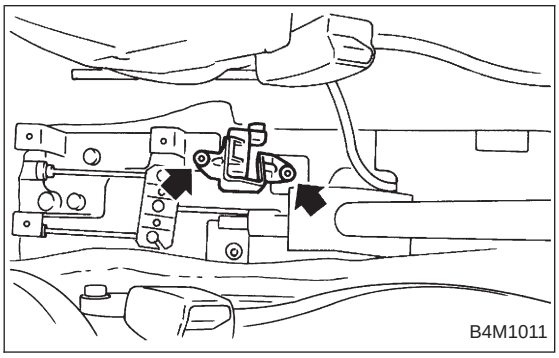

4) Remove G sensor from body.
5) To install, reverse the removal procedure.

CAUTION:
Do not drop or bump G sensor.

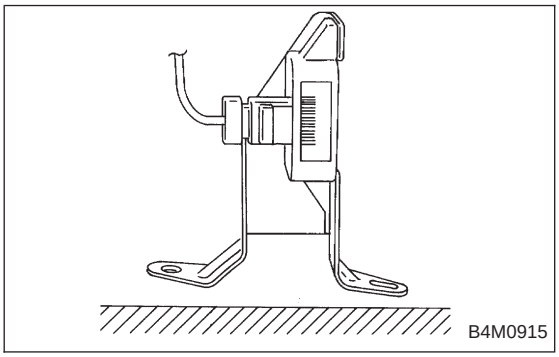

B: INSPECTION

1. USING CIRCUIT TESTER

1) Turn ignition switch to OFF.
2) Remove G sensor from vehicle.
3) Connect connector to G sensor.
4) Turn ignition switch to ON.
5) Measure voltage between G sensor connector terminals.

CHECK : ***Connector & terminal***
(P9) No. 2 (+) — No. 1 (−)
Is voltage 2.3±0.2 V when G sensor is horizontal?

YES : Go to next CHECK .
NO : Replace G sensor.