22. ABS Control Module and Hydraulic Control Unit (ABSCM&H/U) (ABS 5.3i Type)

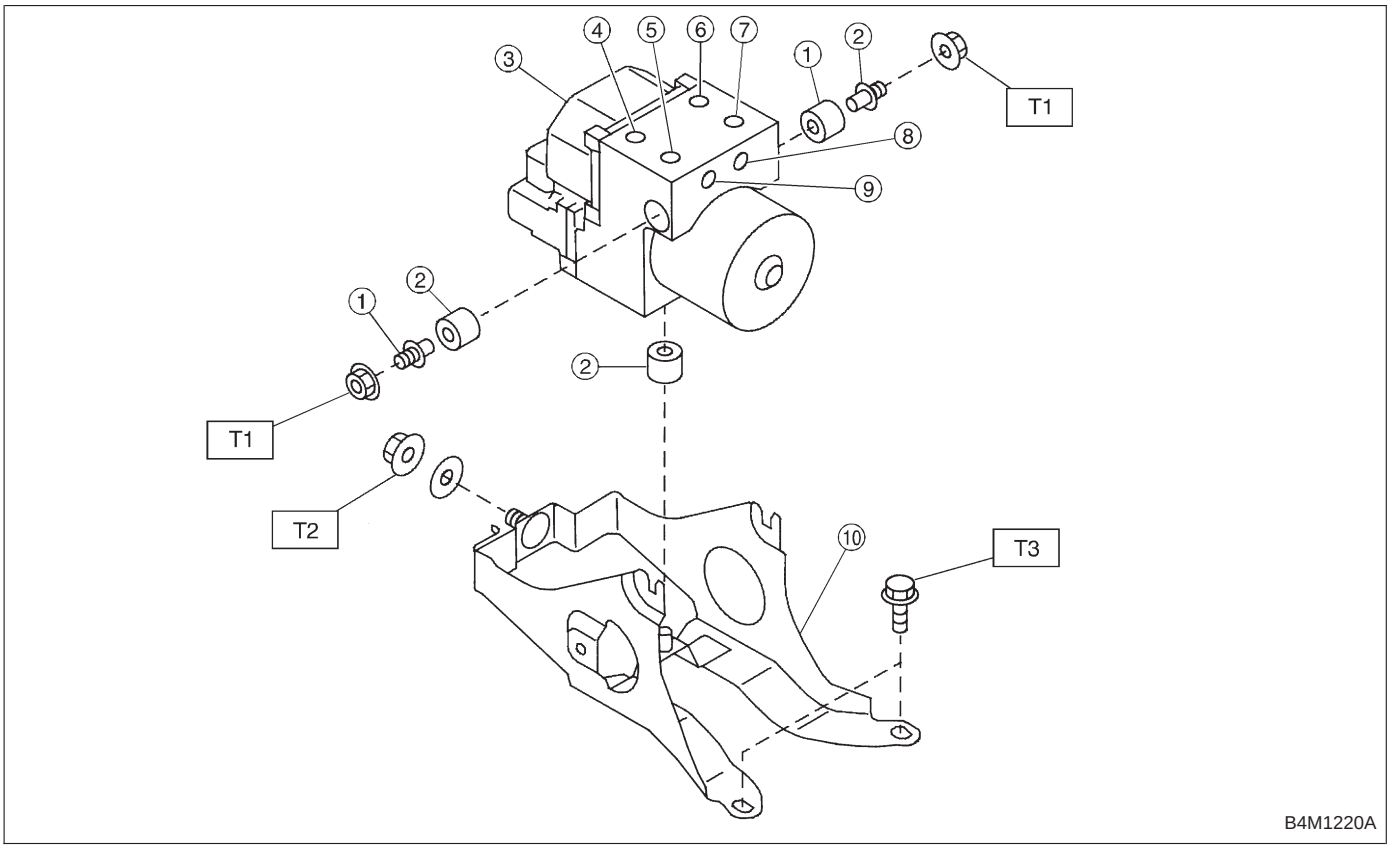

① Stud bolt
② Damper
③ ABS control module and hydraulic control unit
④ Front-LH outlet
⑤ Secondary inlet
⑥ Front-RH outlet
⑦ Primary inlet
⑧ Rear-LH outlet
⑨ Rear-RH outlet
⑩ Bracket

Tightening torque: N·m (kg-m, ft-lb)
T1: 18±5 (1.8±0.5, 13.0±3.6)
T2: 29±7 (3.0±0.7, 21.7±5.1)
T3: 32±10 (3.3±1.0, 24±7)

A: REMOVAL

1) Disconnect ground cable from battery.
2) Remove air intake duct from engine compartment to facilitate removal of ABSCM&H/U.
3) Use an air-gun to get rid of water around the ABSCM&H/U.

CAUTION:
The contact will be insufficient if the terminal gets wet.

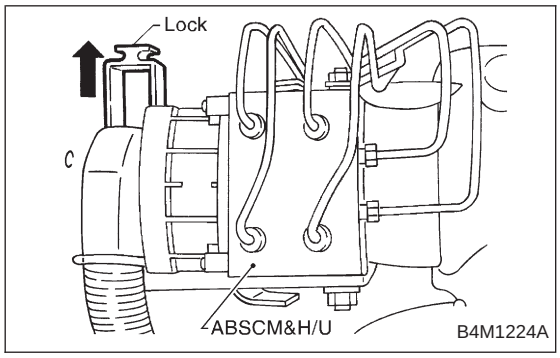

4) Pull on the lock of the ABSCM&H/U connector to remove it.
5) Disconnect connector from ABSCM&H/U.

CAUTION:
Be careful not to let water or other foreign matter contact the ABSCM&H/U terminal.

6) Unlock cable clip.
7) Disconnect brake pipes from ABSCM&H/U.

CAUTION:
Wrap brake pipes with vinyl bag to avoid spilling brake fluid on vehicle body.

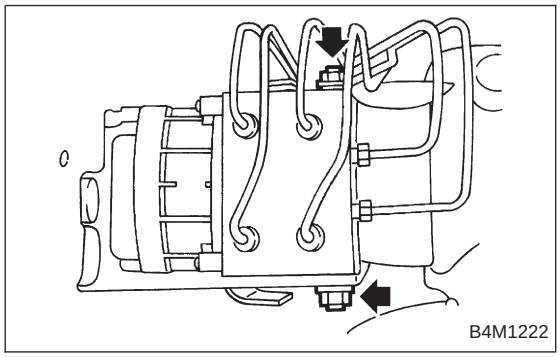

8) Remove ABSCM&H/U from engine compartment.

CAUTION:
- **ABSCM&H/U cannot be disassembled. Do not attempt to loosen bolts and nuts.**
- **Do not drop or bump ABSCM&H/U.**
- **Do not turn the ABSCM&H/U upside down or place it on its side.**
- **Be careful to prevent foreign particles from getting into ABSCM&H/U.**
- **Apply a coat of rust-preventive wax (Nippeco LT or GB) to bracket attaching bolt after tightening.**
- **Do not pull harness disconnecting harness connector.**

B: INSPECTION

1) Check connected and fixed condition of connector.

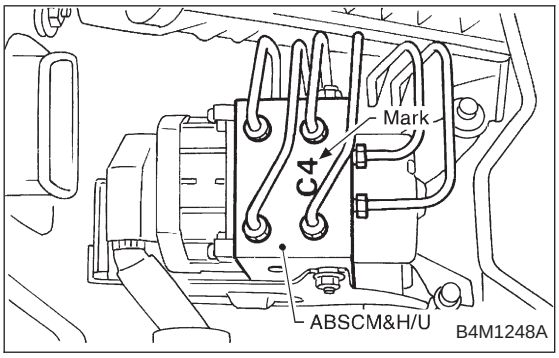

2) Check specifications of the mark with ABSCM&H/U.

Mark	Model
C3	AWD AT
C4	AWD MT

C: CHECKING THE HYDRAULIC UNIT ABS OPERATION

1. CHECKING THE HYDRAULIC UNIT ABS OPERATION BY PRESSURE GAUGE

1) Lift-up vehicle and remove wheels.
2) Disconnect the air bleeder screws from the FL and FR caliper bodies.

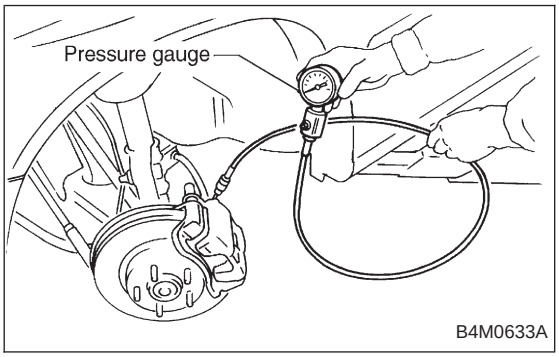

3) Connect two pressure gauges to the FL and FR caliper bodies.

CAUTION:
- **Pressure gauges used exclusively for brake fluid must be used.**
- **Do not employ pressure gauge previously used for transmission since the piston seal is expanded which may lead to malfunction of the brake.**

NOTE:
Wrap sealing tape around the pressure gauge.

4) Bleed air from the pressure gauges.
5) Perform ABS sequence control.
<Ref. to 4-4 [W22D0].>
6) When the hydraulic unit begins to work, and first the FL side performs decompression, holding, and compression, and then the FR side performs decompression, holding, and compression.
7) Read values indicated on the pressure gauge and check if the fluctuation of the values between decompression and compression meets the standard values. Also check if any irregular brake pedal tightness is felt.

	Initial value	When decompressed	When compressed
Front wheel	3,432 kPa (35 kg/cm^2, 498 psi)	490 kPa (5 kg/cm^2, 71 psi) or less	3,432 kPa (35 kg/cm^2, 498 psi) or more
Rear wheel	3,432 kPa (35 kg/cm^2, 498 psi)	490 kPa (5 kg/cm^2, 71 psi) or less	3,432 kPa (35 kg/cm^2, 498 psi) or more

8) Remove pressure gauges from FL and FR caliper bodies.
9) Remove air bleeder screws from the RL and RR caliper bodies.
10) Connect the air bleeder screws to the FL and FR caliper bodies.
11) Connect two pressure gauges to the RL and RR caliper bodies.
12) Bleed air from the pressure gauges and the FL and FR caliper bodies.
13) Perform ABS sequence control.
<Ref. to 4-4 [W22D0].>
14) When the hydraulic unit begins to work, at first the RR side performs decompression, holding, and compression, and then the RL side performs decompression, holding, and compression.
15) Read values indicated on the pressure gauges and check if they meet the standard value.
16) After checking, remove the pressure gauges from caliper bodies.
17) Connect the air bleeder screws to RL and RR caliper bodies.
18) Bleed air from brake line.

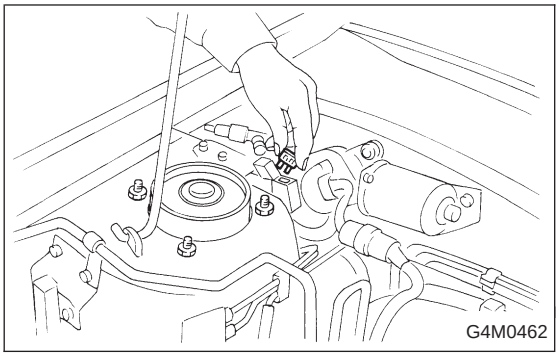

2. CHECKING THE HYDRAULIC UNIT ABS OPERATION WITH BRAKE TESTER

1) In the case of AWD AT vehicles, install a spare fuse with the FWD connector in the engine compartment to simulate FWD vehicles.
2) Prepare for operating ABS sequence control. <Ref. to 4-4 [W22D1] or 4-4 [W22D2].>

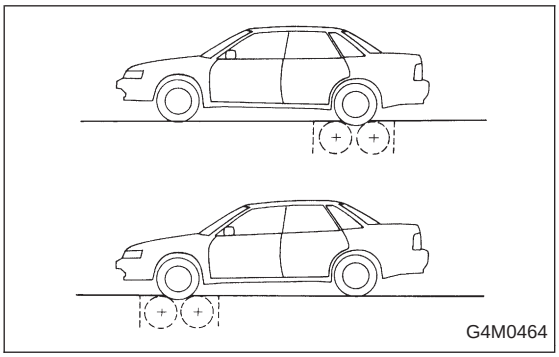

3) Set the front wheels or rear wheels on the brake tester and set the select lever's position at "neutral".
4) Operate the brake tester.
5) Perform ABS sequence control. <Ref. to 4-4 [W22D1] step 1 or 4-4 [W22D2] step 1.>
6) Hydraulic unit begins to work; and check the following working sequence.

(1) The FL wheel performs decompression, holding, and compression in sequence, and subsequently the FR wheel repeats the cycle.
(2) The RR wheel performs decompression, holding, and compression in sequence, and subsequently the RL wheel repeats the cycle.

7) Read values indicated on the brake tester and check if the fluctuation of values, when decompressed and compressed, meet the standard values.

Unit: N (kg, lb)

	Initial value	When decompressed	When compressed
Front wheel	981 (100, 221)	490 (50, 110) or less	981 (100, 221) or more
Rear wheel	981 (100, 221)	490 (50, 110) or less	981 (100, 221) or more

8) After checking, also check if any irregular brake pedal tightness is felt.

D: ABS SEQUENCE CONTROL

1) Under the ABS sequence control, after the hydraulic unit solenoid valve is driven, the operation of the hydraulic unit can be checked by means of the brake tester or pressure gauge.
2) ABS sequence control can be started by diagnosis connector or select monitor.

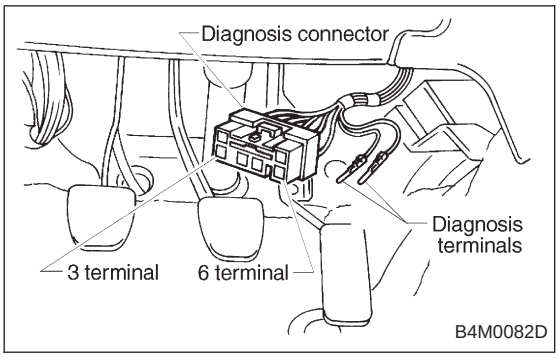

1. OPERATIONAL GUIDELINES OF THE ABS SEQUENCE CONTROL WITH DIAGNOSIS CONNECTOR

1) Connect diagnosis terminals to terminals No. 3 and No. 6 of the diagnosis connector beside driver's seat heater unit.
2) Set the speed of all wheels at 4 km/h (2 MPH) or less.
3) Turn ignition switch OFF.
4) Within 0.5 seconds after the ABS warning light goes out, depress the brake pedal and hold it immediately after ignition switch is turned to ON.

CAUTION:
Do not depress the clutch pedal.

NOTE:
- When the ignition switch is set to on, the brake pedal must not be depressed.
- Engine must not operate.

5) After completion of ABS sequence control, turn ignition switch OFF.

2. OPERATIONAL GUIDELINES OF THE ABS SEQUENCE CONTROL WITH SELECT MONITOR

NOTE:
In the event of any trouble, the sequence control may not be operative. In such a case, activate the sequence control, referring to "OPERATIONAL GUIDELINES OF THE ABS SEQUENCE CONTROL WITH DIAGNOSIS CONNECTOR ". <Ref. to 4-4 [W22D1].>

1) Connect select monitor to data link connector beside driver's seat heater unit.
2) Turn ignition switch ON.
3) Put select monitor to ABS mode.

F D 1 ENT

B4M0635

4) Press F D 1 ENT key.

ABS FUNCTION
CHECK MODE

B4M0997

5) The message shown in the figure is displayed.

BRAKE ON
KEEP 100–150

B4M0998

6) The message shown in the figure is displayed as follows:

(1) When using the brake tester, depress brake pedal with braking force of 981 N (100 kg, 221 lb).
(2) When using the pressure gauge, depress brake pedal so as to make the pressure gauge indicate 3,432 kPa (35 kg/cm^2, 498 psi).

CAUTION:
Do not depress the clutch pedal.

MODE START
PRESS ENT KEY

B4M0999

7) When the message shown in the figure is displayed, press ENT key.
8) Check points will be displayed on select monitor.

FUNCTION START
UNABLE

B4M1000

9) When ABS sequence control cannot be started (by system malfunction, etc.), the message shown in the figure will be displayed.

NOTE:
Read the trouble codes. Repair faulty parts.

ABS FUNCTION
CHECK END

B4M1030

10) After completion of ABS sequence control.

MODE RESTART ?
0 : YES 1 : NO

H4M1144

11) Press 0 key to start ABS sequence control again and press 1 key to end.

3. CONDITIONS FOR COMPLETION OF ABS SEQUENCE CONTROL

When the following conditions develop, the ABS sequence control stops and ABS operation is returned to the normal control mode.

1) When the speed of at least one wheel reaches 10 km/h (6 MPH).
2) When terminal No. 3 or No. 6 are separated from diagnosis terminals. (When select monitor is not used.)
3) When the brake pedal is released during sequence control and the braking lamp switch is set to off.
4) When brake pedal is depressed after ignition key is turned to ON, and before ABS warning light goes out. (When select monitor is not used.)
5) When brake pedal is not depressed after ignition key is turned to ON, and within 0.5 seconds after ABS warning light goes out. (When select monitor is not used.)
6) After completion of the sequence control.
7) When malfunction is detected. (When select monitor is used.)

4. CONDITIONS FOR ABS SEQUENCE CONTROL

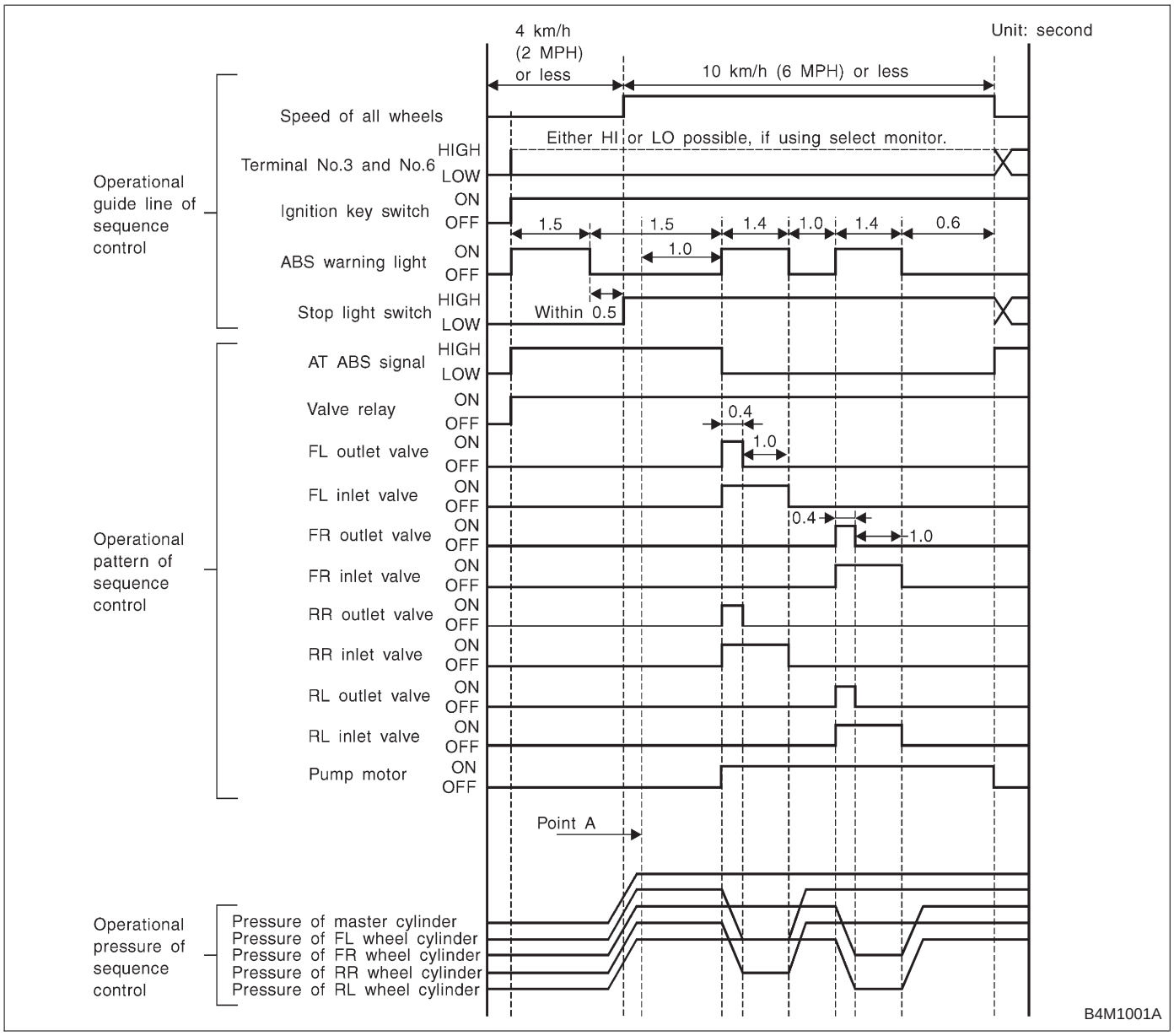

NOTE:
- When select monitor is used, control operation starts at point A. The patterns from IGN key ON to the point A show that operation is started by diagnosis connector.
- HIGH means high voltage.
- LOW means low voltage.

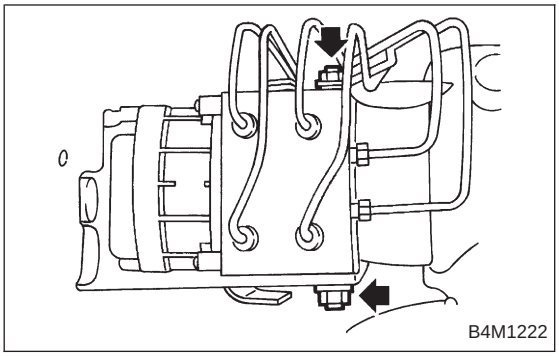

E: INSTALLATION

1) Install ABSCM&H/U.

CAUTION:
Confirm that the specifications of the ABSCM&H/U conforms to the vehicle specifications.

Tightening torque:
18±5 N·m (1.8±0.5 kg-m, 13.0±3.6 ft-lb)

2) Connect brake pipes to their correct ABSCM&H/U connections. <Ref. to 4-4 [W18A4].>

3) Using cable clip, secure ABSCM&H/U harness to bracket.

4) Connect connector to ABSCM&H/U.

CAUTION:
- **Be sure to remove all foreign matter from inside the connector before connecting.**
- **Ensure that the ABSCM&H/U connector is securely locked.**

5) Install air intake duct.
6) Connect ground cable to battery.
7) Bleed air from the brake system.

23. ABS Sensor (ABS 5.3i Type)

<Ref. to 4-4 [W1400].>

24. G Sensor (ABS 5.3i Type)

<Ref. to 4-4 [W1700].>