14. ABS Sensor

A: REMOVAL

1. FRONT ABS SENSOR

1) Disconnect front ABS sensor connector located in engine compartment.

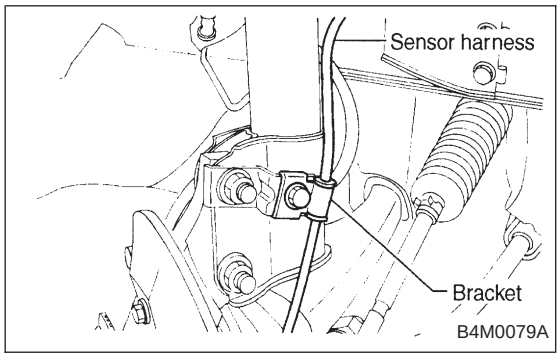

2) Remove bolts which secure sensor harness to strut.

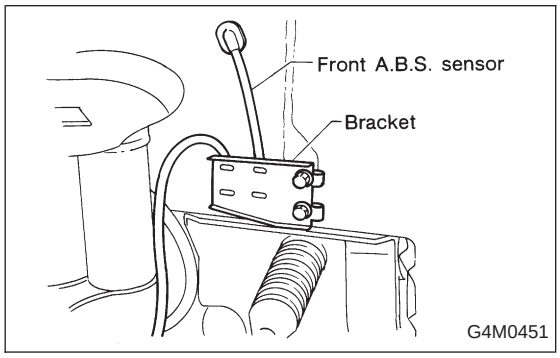

3) Remove bolts which secure sensor harness to body.

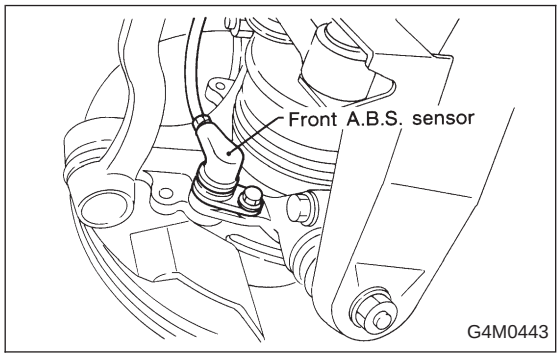

4) Remove bolts which secure front ABS sensor to housing, and remove front ABS sensor.

CAUTION:

- **Be careful not to damage pole piece located at tip of the sensor and teeth faces during removal.**
- **Do not pull sensor harness during removal.**

5) Remove front disc brake caliper and disc rotor from housing after removing front tire.

6) Remove front drive shaft and housing and hub assembly. <Ref. to 4-2 [W1A0].>

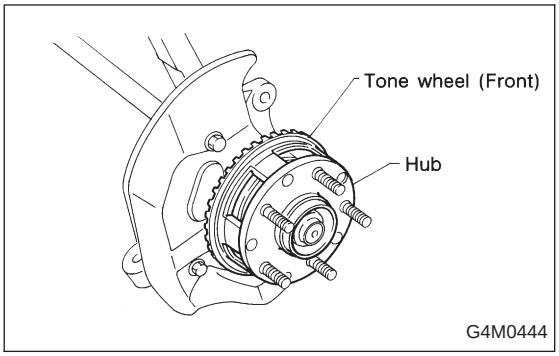

7) Remove tone wheel while removing hub from housing and hub assembly. <Ref. to 4-2 [W1B0].>

CAUTION:
Be careful not to damage teeth faces of tone wheel during removal.

2. REAR ABS SENSOR

1) Remove rear seat and disconnect rear ABS sensor connector.
2) Remove rear sensor harness bracket from rear trailing link and bracket.

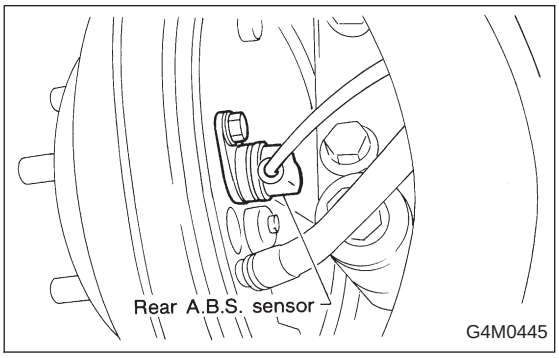

3) Remove rear ABS sensor from rear back plate.
4) Remove rear tone wheel while removing hub from housing and hub assembly. <Ref. to 4-2 [W2A0].>

CAUTION:
- **Be careful not to damage pole piece located at tip of the sensor and teeth faces during removal.**
- **Do not pull sensor harness during removal.**

B: INSPECTION

1. ABS SENSOR

1) Check pole piece of ABS sensor for foreign particles or damage. If necessary, clean pole piece or replace ABS sensor.

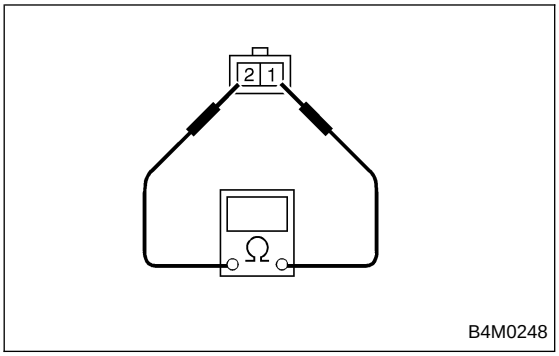

2) Measure ABS sensor resistance.

ABS sensor	Terminal No.	Standard
Front - LH	1 and 2	1.0±0.2 kΩ
Front - RH	1 and 2	
Rear - LH	1 and 2	
Rear - RH	1 and 2	

CAUTION:
If resistance is outside the standard value, replace ABS sensor with new one.

NOTE:
Check ABS sensor cable for discontinuity. If necessary, replace with a new one.

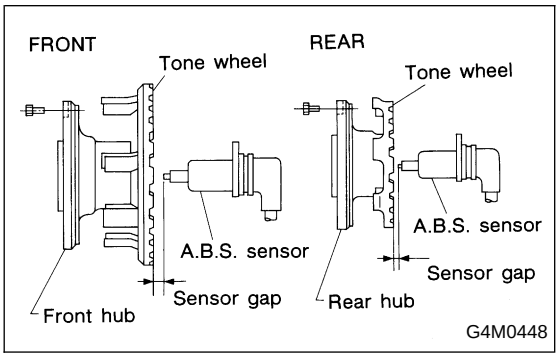

2. TONE WHEEL

1) Check tone wheel's teeth (44 pieces) for cracks or dents. If necessary, replace tone wheel with a new one.
2) Clearances (sensor gaps) should be measured one by one to ensure tone wheel and speed sensor are installed correctly.

ABS sensor clearance:
Front
0.9 — 1.4 mm (0.035 — 0.055 in)
Rear
0.7 — 1.2 mm (0.028 — 0.047 in)

NOTE:
● If clearance is narrow, adjust by using spacer (Part No. 26755AA000).
● If clearance is wide, check the outputted voltage then replace ABS sensor or tone wheel if the outputted voltage is outside the specification.

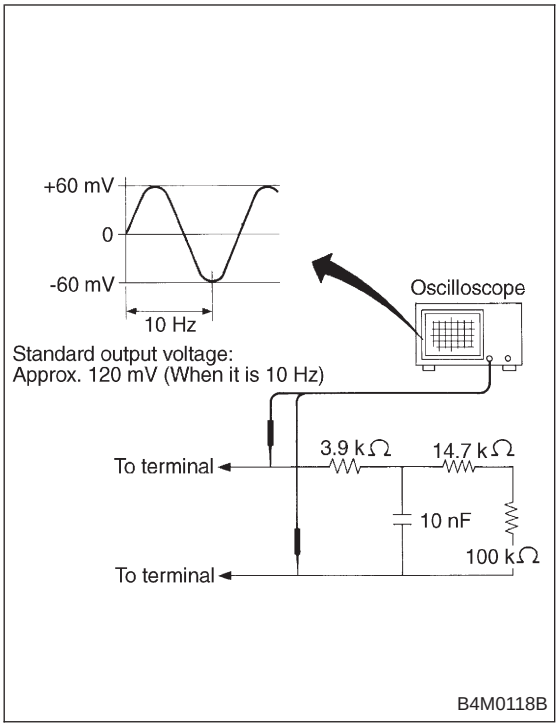

3. OUTPUT VOLTAGE

Output voltage can be checked by the following method. Install resistor and condenser, then rotate wheel about 2.75 km/h (2 MPH) or equivalent.

NOTE:
Regarding terminal No., please refer to item 1. ABS SENSOR.

C: INSTALLATION

1. FRONT ABS SENSOR

1) Install tone wheel on hub, then install housing on hub assembly. <Ref. to 4-2 [W1D0].>

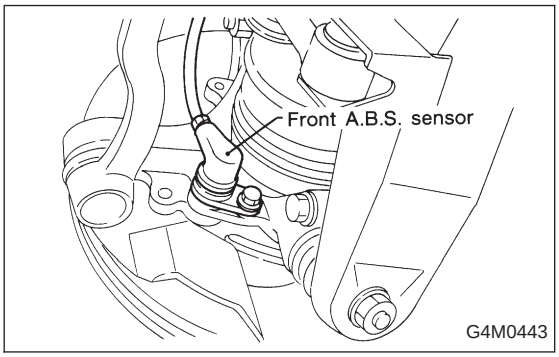

2) Temporarily install front ABS sensor on housing.

CAUTION:
Be careful not to strike ABS sensor's pole piece and tone wheel's teeth against adjacent metal parts during installation.

3) Install front drive shaft to hub spline. <Ref. to 4-2 [W1E0].>

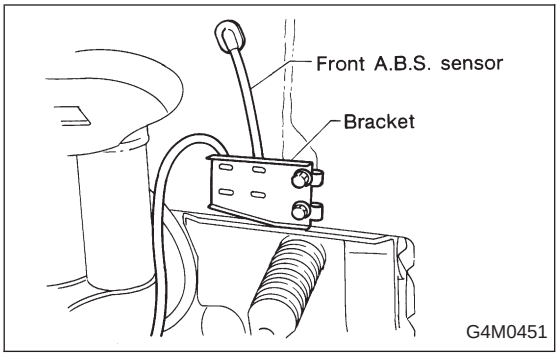

4) Install front ABS sensor on strut and wheel apron bracket.

Tightening torque:
32±10 N·m (3.3±1.0 kg-m, 24±7 ft-lb)

5) Place a thickness gauge between ABS sensor's pole piece and tone wheel's tooth face. After standard clearance is obtained over the entire perimeter, tighten ABS sensor on housing to specified torque.

ABS sensor standard clearance:
0.9 — 1.4 mm (0.035 — 0.055 in)

Tightening torque:
32±10 N·m (3.3±1.0 kg-m, 24±7 ft-lb)

CAUTION:
Check the marks on the harness to make sure that no distortion exists. (RH: white, LH: yellow)

NOTE:
If the clearance is outside specifications, readjust.

2. REAR ABS SENSOR

1) Install rear tone wheel on hub, then rear housing on hub. <Ref. to 4-2 [W2D0].>

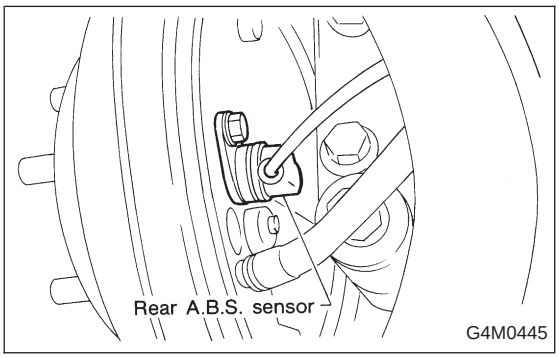

2) Temporarily install rear ABS sensor on back plate.

CAUTION:
Be careful not to strike ABS sensor's pole piece and tone wheel's teeth against adjacent metal parts during installation.

3) Install rear drive shaft to rear housing and rear differential spindle. <Ref. to 4-2 [W2E0].>

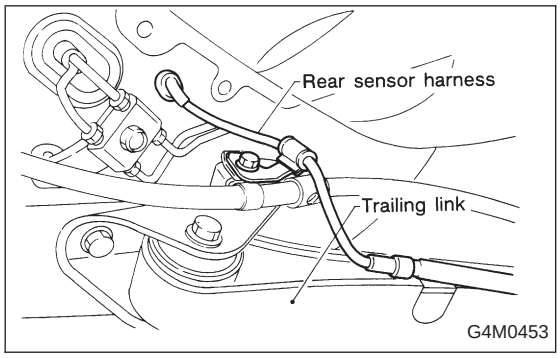

4) Install rear sensor harness on rear trailing link.

Tightening torque:
32±10 N·m (3.3±1.0 kg-m, 24±7 ft-lb)

5) Place a thickness gauge between ABS sensor's pole piece and tone wheel's tooth face. After standard clearance is obtained over the entire perimeter, tighten ABS sensor on back plate to specified torque.

ABS sensor standard clearance:
0.7 — 1.2 mm (0.028 — 0.047 in)

Tightening torque:
32±10 N·m (3.3±1.0 kg-m, 24±7 ft-lb)

CAUTION:
Check the marks on the harness to make sure that no distortion exists. (RH: white, LH: yellow)

NOTE:
If the clearance is outside specifications, readjust.