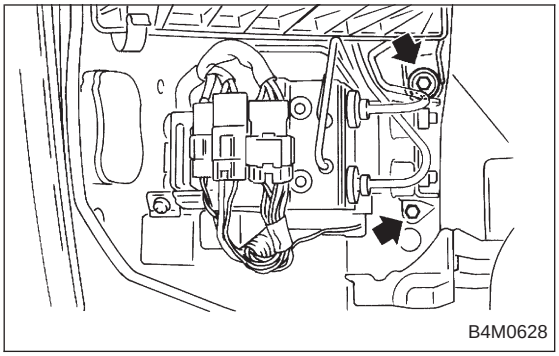

G: INSTALLATION

1) Install hydraulic unit and bracket.

Tightening torque:
32±7 N·m (3.3±0.7 kg-m, 23.9±5.1 ft-lb)

2) Connect brake pipes to their correct hydraulic unit connections. <Ref. to 4-4 [W18A3].>
3) Connect connector to hydraulic unit.
4) Install canister.
5) Install air cleaner case.
6) Install air intake duct.
7) Connect ground cable to battery.

CAUTION:
Cover relay securely with rubber boot.

21. ABS/TCS Control Module

A: REMOVAL

1) Disconnect ground cable from battery.
2) Remove floor mat located under lower right side of front seat.

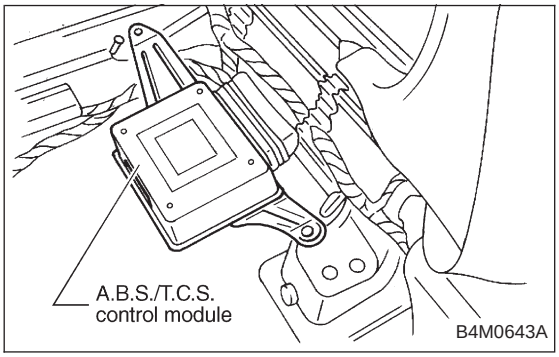

3) Remove screw which secure ABS/TCS control module from the body.
4) Disconnect connector from ABS/TCS control module.

B: INSPECTION

Check that connector is connected correctly and that connector terminal sliding resistance is correct.

C: INSTALLATION

1) Connect connector to ABS/TCS control module.
2) Install ABS/TCS control module on the body.

CAUTION:

- **When installing seat rail, be careful no to have the harness caught in the rail.**
- **Cover the connector completely with rubber boot.**