19. Air Bleeding (With TCS model)

A: RULES FOR EFFECTIVE BLEEDING

1) Pressure is not applied to suction pipe by depressing brake pedal. When any of the following are performed, bleed air from suction pipe by air bleeding control operation.

NOTE:
For TCS vehicle, suction pipe is installed between master cylinder and hydraulic unit to allow flow of brake fluid between them during ABS and TCS operation.

(1) When brake pipe is disconnected from master cylinder.
(2) When brake pipe between hydraulic unit and master cylinder is disconnected.
(3) When fluid is emptied from reservoir tank.

2) The time interval between two brake pedal operations (from the time when the pedal is released to the time when it is depressed another time) shall be approximately 3 seconds.
3) The air bleeder on each brake shall be released for 1 to 2 seconds.

B: BLEEDING PROCEDURE WITH AIR BLEEDING CONTROL

1. BLEEDING PROCEDURE

CAUTION:
- **The FMVSS No. 116, fresh DOT3 or 4 brake fluid must be used.**
- **Cover bleeder with waste cloth, when loosening it, to prevent brake fluid from being splashed over surrounding parts.**
- **Avoid mixing different brands of brake fluid to prevent degrading the quality of the fluid.**
- **Be careful not to allow dirt or dust to get into the reservoir tank.**
- **During bleeding operation, keep the brake reserve tank filled with brake fluid to eliminate entry of air.**

NOTE:
- Brake pedal operating must be very slow.
- For convenience and safety, it is advisable to have two man working.

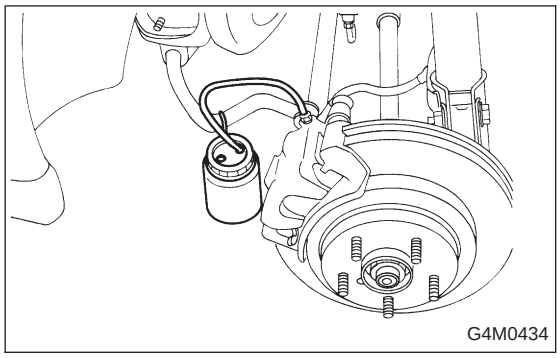
G4M0434

1) Start air bleeding control operation. <Ref. to 4-4 [W19C0] or 4-4 [W19D0].>
2) Make sure that there is no leak from joints and connections of the brake system.
3) Bleed air through front RH caliper by operating brake pedal.

(1) Fit one end of vinyl tube into the air bleeder and put the other end into a brake fluid container.

(2) Slowly depress the brake pedal and keep it depressed. Then, open the air bleeder to discharge air together with the fluid.
Release air bleeder for 1 to 2 seconds.
Next, with the bleeder closed, slowly release the brake pedal.
Repeat these steps until there are no more air bubbles in the vinyl tube.
Allow 3 to 4 seconds between two brake pedal operations.

CAUTION:
Cover bleeder with waste cloth, when loosening it, to prevent brake fluid from being splashed over surrounding parts.

NOTE:
Brake pedal operating must be very slow.

4) Bleed air from suction pipe through front RH caliper.
(1) Open the air bleeder.
(2) Keep pressing TCS OFF switch for 20 seconds or more.

NOTE:
Ensure no air comes out from air bleeder.

(3) Close the air bleeder.

5) Bleed air through front LH caliper by operating brake pedal. This is the same procedure as step 3).
6) Bleed air from suction pipe through front LH caliper. This is the same procedure as step 4).
7) Bleed air through front RH and LH calipers by operating brake pedal. This is the same procedure as step 3). Repeat steps 3) to 7) until air does no longer comes out.
8) Tighten air bleeders securely when bubbles are visible.

Air bleeder tightening torque:
8±1 N·m (0.8±0.1 kg-m, 5.8±0.7 ft-lb)

9) Bleed air through rear LH and RH caliper by operating brake pedal. This is the same procedure as step 3).
10) Tighten air bleeders securely when bubbles are visible.

Air bleeder tightening torque:
8±1 N·m (0.8±0.1 kg-m, 5.8±0.7 ft-lb)

11) Operate FRO (Front Right Outlet) valve and RLO (Rear Left Outlet) valve to bleed air from hydraulic unit outlet circuit.

(1) Press TCS OFF switch while depressing brake pedal.
(2) Make sure ABS warning light illuminates.
(3) Repeatedly depress and release brake pedal 10 times or more while pressing TCS OFF switch.

NOTE:
- Air comes out from reservoir tank.

12) Operate FLO (Front Left Outlet) valve and RRO (Rear Right Outlet) valve to bleed air from hydraulic unit outlet circuit.

(1) Press TCS OFF switch while depressing brake pedal.
(2) Make sure TCS warning light illuminates.
(3) Repeatedly depress and release brake pedal 10 times or more while pressing TCS OFF switch.

NOTE:
- Air comes out from reservoir tank.
- The operations in steps 11) and 12) above can be switched with each other by operating brake pedal (stop light switch) while pressing TCS OFF switch.
- Repeat procedures 11) and 12) until air no longer comes out of reservoir tank.

13) Perform these steps for the brakes connecting to the secondary chamber of master cylinder, first, and then for the ones connecting to primary chamber. With all procedures completed, fully depress the brake pedal and keep it in that position for approximately 20 seconds to make sure that there is no leak evident in the entire system.
14) Turn ignition switch OFF.
15) Perform TCS sequence control. <Ref. to 4-4 [W20F0].>

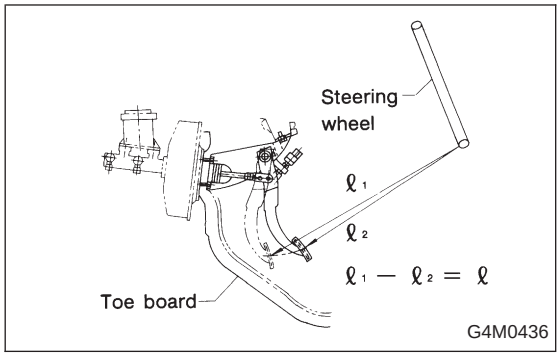

16) Check the pedal stroke.
While the engine is idling, depress the brake pedal with a 490 N (50 kg, 110 lb) load and measure the distance between the brake pedal and steering wheel. With the brake pedal released, measure the distance between the pedal and steering wheel again. The difference between the two measurements must be less than specified.

Specified pedal stroke:
With TCS
95 mm (3.74 in)
When depressing brake pedal with a 490 N (50 kg, 110 lb) load.

If the distance is more than specifications, there is a possibility that air is in the brake line. Bleed air from the brake line. <Ref. to 4-4 [W19B1].>

17) Turn ignition switch OFF.
18) Disconnect select monitor or diagnosis terminal.
19) Add brake fluid to the required level (MAX. level) of reserve tank.
20) As a final step, test run the vehicle at low speed and apply brakes relatively hard 2 to 3 times to ensure that brakes provide normal braking action on all four wheels without dragging and uneven braking.

2. CONDITIONS FOR AIR BLEEDING CONTROL

	Stop light switch	TCS OFF switch	Pump motor	TCS valve	FRO RLO	FLO RRO	TCS operating indicator light	ABS warning light	TCS warning light
Air bleeding control is operating.	OFF	ON	ON	Close	Close	Close	ON	ON	ON
	ON	ON	OFF	Open	Open	Close	ON	ON	OFF
	ON	ON	OFF	Open	Close	Open	ON	OFF	ON
	ON or OFF	OFF	OFF	Open	Close	Close	ON	OFF	OFF
Stops temporarily.*	—	—	OFF	Open	Close	Close	OFF	OFF	OFF
Prohibited.	—	—	OFF	Open	Close	Close	OFF	ON	ON

*: When brake fluid level switch detects brake fluid in LOW level, control operation stops temporarily. After refilling brake fluid, operation re-starts.

3. CONDITIONS FOR COMPLETION OF AIR BLEEDING CONTROL

When any of the following conditions occurs, ABS and TCS warning lights illuminate. Air bleeding control stops, while the ABS and TCS function will then stop. The brake system functions as a conventional brake system.

1) When the speed of at least one wheel reaches 10 km/h (6 MPH).
2) When terminal No. 4 is separated from diagnosis terminal. (When select monitor is not used.)
3) When pump motor remains ON for two minutes.
4) When TCS valve remains open for two minutes.
5) When outlet valve remains closed for two minutes.
6) When malfunction is detected.

NOTE:
When a malfunction is detected the air bleeding operation stops and the trouble codes are stored in memory.

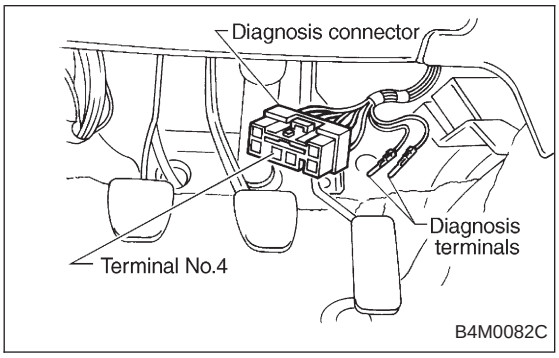

C: AIR BLEEDING CONTROL WITH DIAGNOSIS CONNECTOR

1) Connect diagnosis terminals to terminal No. 4 of the diagnosis connector beside driver's seat heater unit.

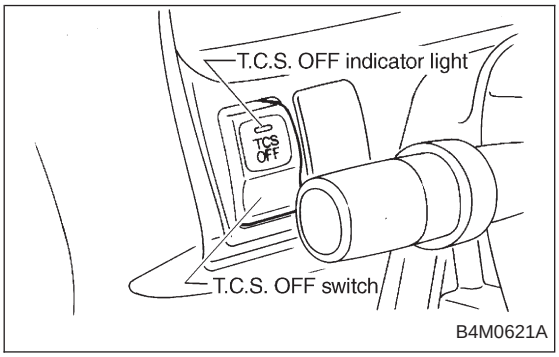

2) Start the engine while pushing TCS OFF switch.

NOTE:
Keep the TCS OFF switch depressed even after the engine has started.

3) After ABS and TCS warning lights go out, depress brake pedal within 0.5 seconds.
4) After ensuring TCS ON indicator illuminates, release TCS OFF switch and brake pedal.
5) Air bleeding control operation starts.

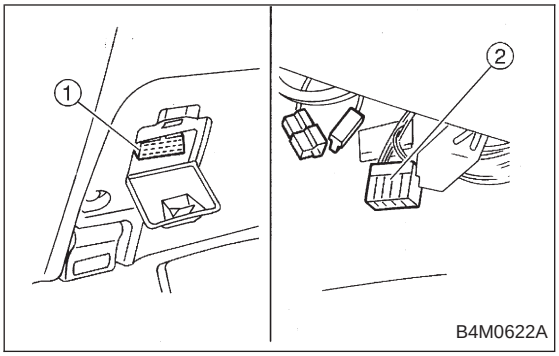

D: AIR BLEEDING CONTROL WITH SELECT MONITOR

1) Connect select monitor to data link connector beside driver's seat instrument panel lower.
① Data link connector (for Subaru select monitor and OBD-II general scan tool)
② Data link connector (for Subaru select monitor)

NOTE:
When using data link connector ① above, use ST.

ST 498357200 ADAPTER CABLE

2) Start the engine.
3) Change select monitor to TCS mode by pressing the function key.

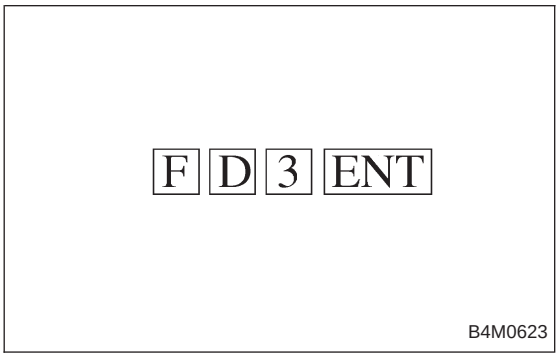

4) Press FD3 ENT key.

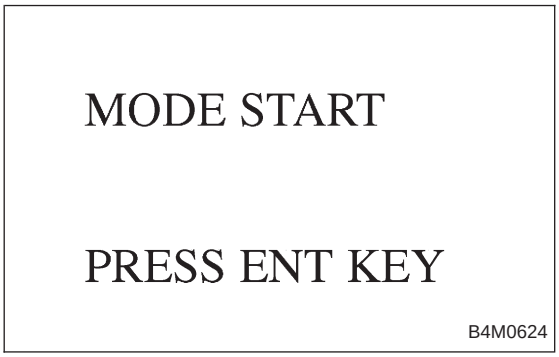

5) When the message shown in the figure is displayed, press ENT key.

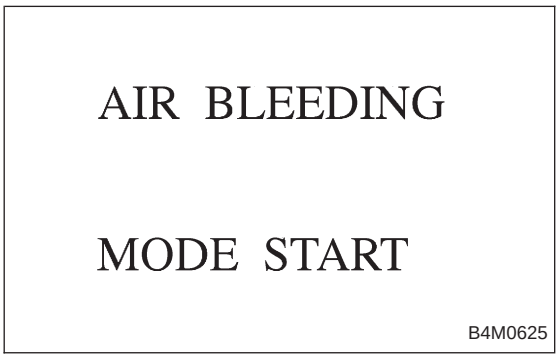

6) Air bleeding control operation starts.

PROCESS

AIR BLEEDING

B4M0626

7) Select monitor indicates that air bleeding control is now operating.

FUNCTION START

UNABLE

B4M0627

8) When air bleeding control cannot be started (by system malfunction, etc.), the message shown in the figure will be displayed.

NOTE:
Read the trouble codes. Repair faulty parts.