11. Air Bleeding (Without TCS model)

A: GENERAL RULES FOR EFFECTIVE BLEEDING

1) Start with the brakes (wheels) connecting to the secondary chamber of the master cylinder.
2) The time interval between two brake pedal operations (from the time when the pedal is released to the time when it is depressed another time) shall be approximately 3 seconds.
3) The air bleeder on each brake shall be released for 1 to 2 seconds.

B: BLEEDING PROCEDURE

CAUTION:
- **The FMVSS No. 116, fresh DOT3 or 4 brake fluid must be used.**
- **Cover bleeder with waste cloth, when loosening it, to prevent brake fluid from being splashed over surrounding parts.**
- **Avoid mixing different brands of brake fluid to prevent degrading the quality of the fluid.**
- **Be careful not to allow dirt or dust to get into the reservoir tank.**

NOTE:
- During bleeding operation, keep the brake reserve tank filled with brake fluid to eliminate entry of air.
- Brake pedal operating must be very slow.
- For convenience and safety, it is advisable to have two man working.

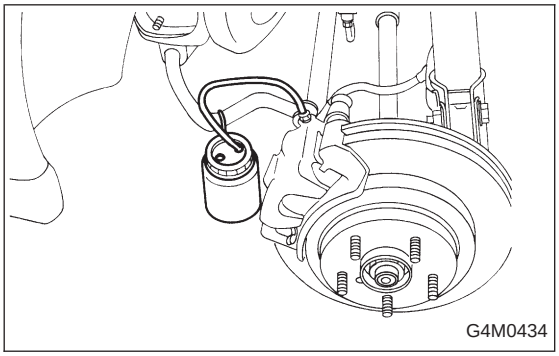
G4M0434

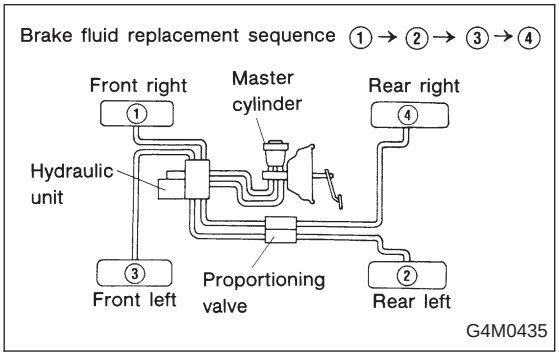

G4M0435

1) Make sure that there is no leak from joints and connections of the brake system.
2) Fit one end of vinyl tube into the air bleeder and put the other end into a brake fluid container.
3) Slowly depress the brake pedal and keep it depressed. Then, open the air bleeder to discharge air together with the fluid.
Release air bleeder for 1 to 2 seconds.
Next, with the bleeder closed, slowly release the brake pedal.
Repeat these steps until there are no more air bubbles in the vinyl tube.
Allow 3 to 4 seconds between two brake pedal operations.

CAUTION:
Cover bleeder with waste cloth, when loosening it, to prevent brake fluid from being splashed over surrounding parts.

NOTE:
Brake pedal operating must be very slow.

4) Tighten air bleeder securely when no air bubbles are visible.

Air bleeder tightening torque:
8±1 N·m (0.8±0.1 kg-m, 5.8±0.7 ft-lb)

5) Perform these steps for the brakes connecting to the secondary chamber of master cylinder, first, and then for the ones connecting to primary chamber. With all procedures completed, fully depress the brake pedal and keep it in that position for approximately 20 seconds to make sure that there is no leak evident in the entire system.

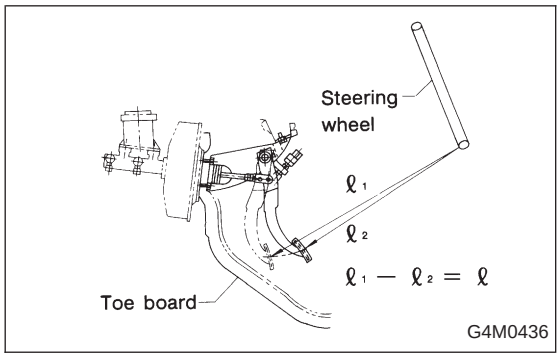

6) Perform sequence control. (With ABS model) <Ref. to 4-4 [W15C1].>
7) Check the pedal stroke.
While the engine is idling, depress the brake pedal with a 490 N (50 kg, 110 lb) load and measure the distance between the brake pedal and steering wheel. With the brake pedal released, measure the distance between the pedal and steering wheel again. The difference between the two measurements must be more than specified.

Specified pedal stroke:
Without ABS
90 mm (3.54 in)
With ABS
95 mm (3.74 in)
When depressing brake pedal with a 490 N (50 kg, 110 lb) load.

(1) Models without ABS
If the distance is more than specifications, there is a possibility that air is in the brake line. Bleed air from the brake line.
(2) Models with ABS
If the distance is more than specifications, there is a possibility air is in the inside of the hydraulic unit. Therefore, air must be bled from the inside of the hydraulic unit to the brake pipes in accordance with the bleeding sequence control. <Ref. to 4-4 [W15C1].>

8) Add brake fluid to the required level (MAX. level) of reserve tank.
9) As a final step, test run the vehicle at low speed and apply brakes relatively hard 2 to 3 times to ensure that brakes provide normal braking action on all four wheels without dragging and uneven braking.