# 6. Brake Booster

## A: REMOVAL

1) Remove or disconnect the following parts at engine compartment.
   (1) Disconnect connector for brake fluid level indicator.
   (2) Remove brake pipes from master cylinder.
   (3) Remove master cylinder installing nuts.
   (4) Disconnect vacuum hose from brake booster.
2) Remove the following parts from the pedal bracket.
   (1) Snap pin and clevis pin
   (2) Four brake booster installing nuts
3) Remove brake booster while shunning brake pipes.

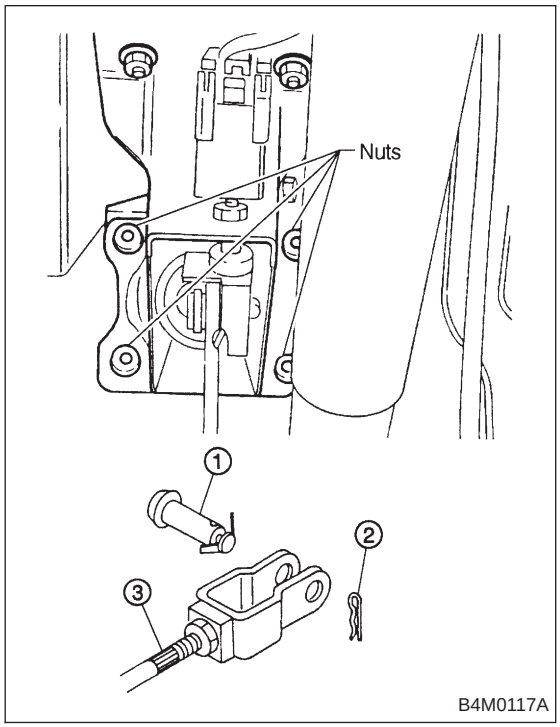


## B: INSTALLATION

1) Mount brake booster in position.
2) Connect operating rod to brake pedal with clevis pin and snap pin.

① Clevis pin
② Snap pin
③ Operating rod

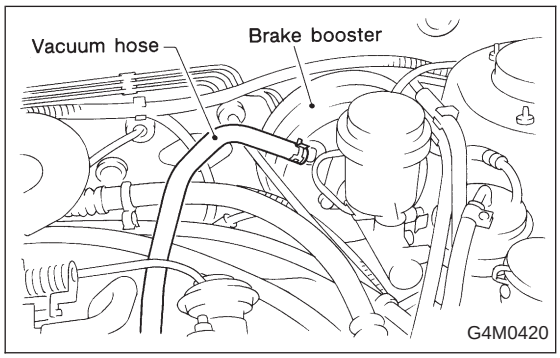


3) Connect vacuum hose to brake booster.
4) Mount master cylinder onto brake booster.
5) Connect brake pipes to master cylinder.
6) Connect electric connector for brake fluid level indicator.

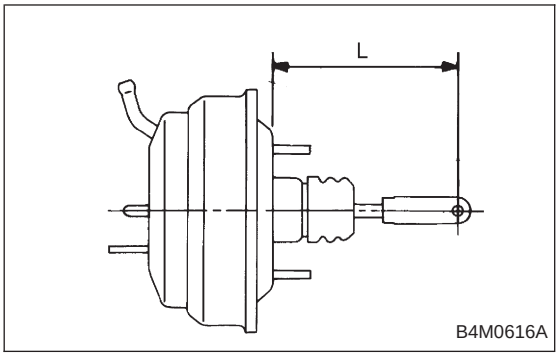


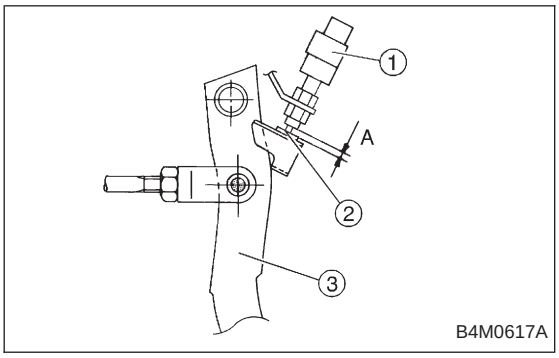


7) Adjust operating rod of brake booster.

***Standard: L***
***145.3 mm (5.72 in)***

If it is not in specified value, adjust it by adjusting brake booster operating rod.

8) Measure the clearance between threaded end of stop light switch and stopper.

If it is not in specified value, adjust it by adjusting position of stop light switch.

① Stop light switch
② Stopper
③ Brake pedal

**CAUTION:**
**Be careful not to rotate stop light switch.**

***Stop light switch clearance: A***
***0.3 mm (0.012 in)***

9) Apply grease to operating rod connecting pin to prevent it from wearing.

10) Bleed air from brake system.

***Tightening torque (Air bleeder screw):***
***8±1 N·m (0.8±0.1 kg-m, 5.8±0.7 ft-lb)***

11) Conduct road tests to ensure brakes do not drag.

## C: OPERATION CHECK

**CAUTION:**

**When checking operation, be sure to securely apply the hand brake.**

### 1. CHECKING WITHOUT USING GAUGES

This method cannot determine the exact portion which has failed, but it can provide a rough understanding of the nature of the failure if checking is conducted in accordance with the following procedures.

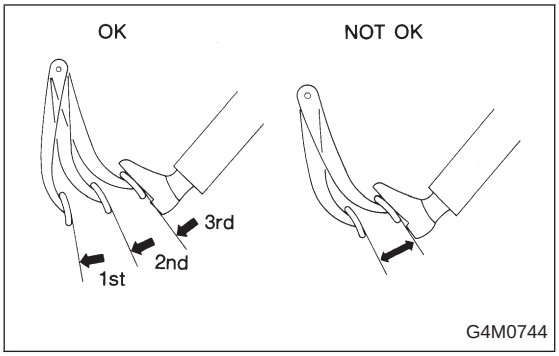


## 2. AIR TIGHTNESS CHECK

Start engine, and run it for 1 to 2 minutes, then turn it off. Depress brake pedal several times applying the same pedal force as that used in ordinary braking operations. The pedal stroke should be greatest on the 1st depression, and it should become smaller with each successive depression. If no change occurs in the pedal height while in a depressed state, brake booster is faulty.

NOTE:
- In the event of defective operation, inspect the condition of the check valve and vacuum hose.
- Replace them if faulty and conduct the test again.
- If no improvement is observed, check precisely with gauges.

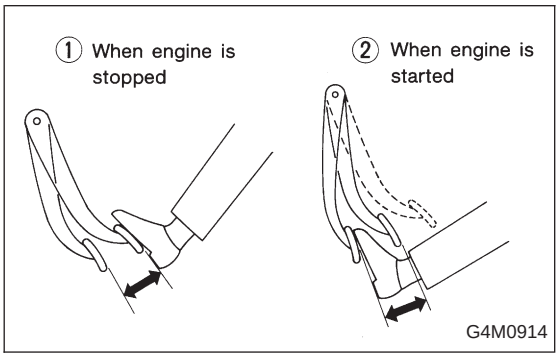


## 3. OPERATION CHECK

1) With engine off, depress brake pedal several times applying the same pedal force and make sure that the pedal height does not vary with each depression of the pedal.
2) With brake pedal depressed, start engine.
3) As engine starts, brake pedal should move slightly toward the floor. If no change occurs in the pedal height, brake booster is faulty.

NOTE:
If faulty, check precisely with gauges.

## 4. LOADED AIR TIGHTNESS CHECK

Depress brake pedal while engine is running, and turn off engine while the pedal is still depressed. Keep the pedal depressed for 30 seconds; if no change occurs in the pedal height, brake booster is functioning normally; if the pedal height increases, it is faulty.

NOTE:
If faulty, check precisely with gauges.

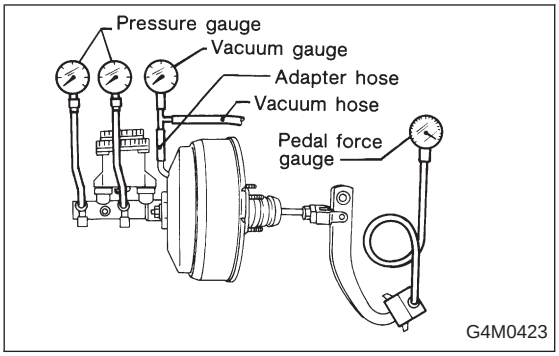


### 5. CHECKING WITH GAUGES

Connect gauges as shown in Figure. After bleeding air from pressure gauges, proceed to each check.

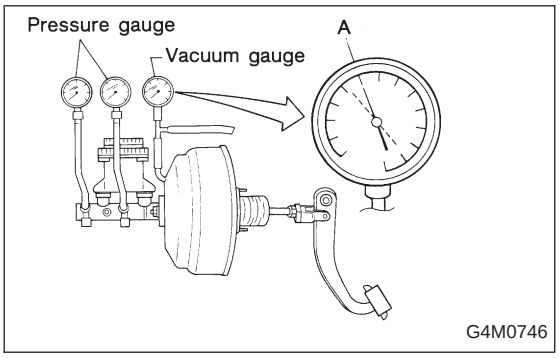


### 6. AIR TIGHTNESS CHECK

1) Start engine and keep it running until a vacuum of 66.7 kPa (500 mmHg, 19.69 inHg) = point A is indicated on vacuum gauge. Do not depress brake pedal.
2) Stop engine and watch the gauge. If the vacuum drop range is less than 3.3 kPa (25 mmHg, 0.98 inHg) within 15 seconds after stopping engine, brake booster is functioning properly.
If defective, the cause may be one of those listed below.

- Check valve malfunction
- Leak from vacuum hose
- Leak from the shell jointed portion or stud bolt welded portion
- Damaged diaphragm
- Leak from valve body seal and bearing portion
- Leak from plate and seal assembly portion
- Leak from poppet valve assembly portion

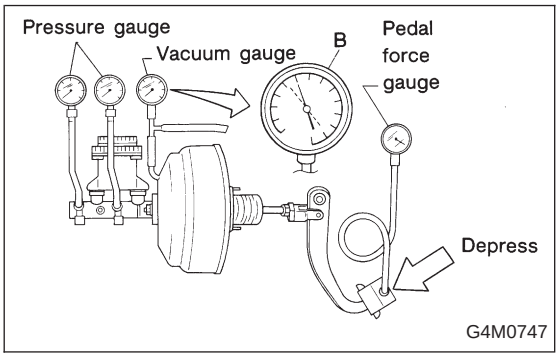


### 7. LOADED AIR TIGHTNESS CHECK

1) Start engine and depress brake pedal with pedal force of 196 N (20 kg, 44 lb). Keep engine running until a vacuum of 66.7 kPa (500 mmHg, 19.69 inHg) = point B is indicated on vacuum gauge while the pedal is still depressed.
2) Stop engine and watch vacuum gauge.
If the vacuum drop range is less than 3.3 kPa (25 mmHg, 0.98 inHg) within 15 seconds after stopping engine, brake booster is functioning properly.
If defective, refer to “AIR TIGHTNESS CHECK” described above.

### 8. LACK OF BOOSTING ACTION CHECK

Turn off engine, and set the vacuum gauge reading at “0”. Then, check the fluid pressure when brake pedal is depressed. The pressure must be greater than the standard value listed below.

| Brake pedal force | 147 N (15 kg, 33 lb) | 294 N (30 kg, 66 lb) |
|---|---|---|
| Models without ABS and TCS | 785 kPa (8 kg/cm$^2$, 114 psi) | 2,158 kPa (22 kg/cm$^2$, 313 psi) |
| Models with ABS and TCS | 588 kPa (6 kg/cm$^2$, 85 psi) | 1,667 kPa (17 kg/cm$^2$, 242 psi) |

### 9. BOOSTING ACTION CHECK

Set the vacuum gauge reading at 66.7 kPa (500 mmHg, 19.69 inHg) by running engine. Then, check the fluid pressure when brake pedal is depressed. The pressure must be greater than the standard value listed below.

| Brake pedal force | 147 N (15 kg, 33 lb) | 294 N (30 kg, 66 lb) |
|---|---|---|
| Models without ABS and TCS | 5,492 kPa (56 kg/cm$^2$, 796 psi) | 8,434 kPa (86 kg/cm$^2$, 1,223 psi) |
| Models with ABS and TCS | 5,394 kPa (55 kg/cm$^2$, 782 psi) | 10,003 kPa (102 kg/cm$^2$, 1,450 psi) |

## D: HANDLING PRECAUTIONS

1) Be careful not to drop brake booster. Brake booster should be discarded if it has been dropped.
2) Use special care when handling operating rod.
If excessive force is applied to operating rod, sufficient to cause a change in the angle in excess of ±3°, it may result in damage to the power piston cylinder.

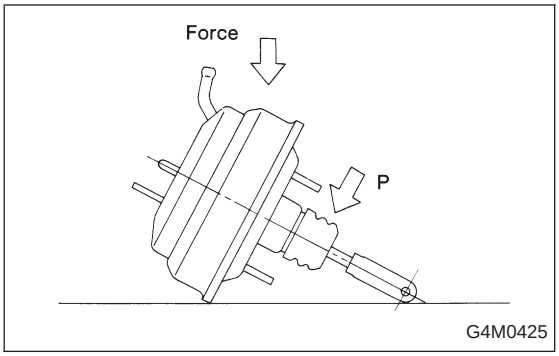


3) Use care when placing brake booster on the floor.

**CAUTION:**
**If external force is applied from above when brake booster is placed in this position, the resin portion as indicated by “P”, may be damaged.**

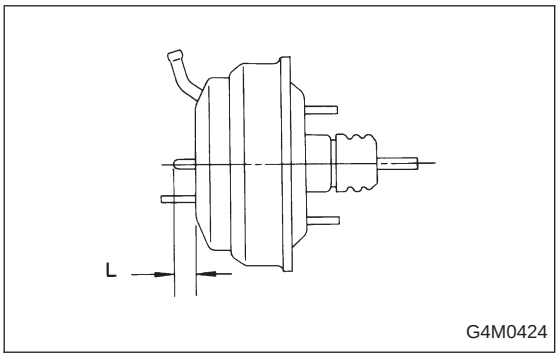


4) Do not change the push rod length. If it has been changed, reset the projected length “L” to the standard length.

***Standard:***
***L = 10 mm (0.39 in)***