12. Brake Fluid Replacement

NOTE:
To always maintain the brake fluid characteristics, replace the brake fluid according to maintenance schedule or earlier than that when used in severe condition.

A: REPLACEMENT

CAUTION:
● The FMVSS No. 116, fresh DOT3 or 4 brake fluid must be used.
● Cover bleeder with waste cloth, when loosening it, to prevent brake fluid from being splashed over surrounding parts.
● Avoid mixing different brands of brake fluid to prevent degrading the quality of the fluid.
● Be careful not to allow dirt or dust to get into the reservoir tank.

NOTE:
● During bleeding operation, keep the brake reserve tank filled with brake fluid to eliminate entry of air.
● Brake pedal operating must be very slow.
● For convenience and safety, it is advisable to have two man working.
● The amount of brake fluid required is approximately 500 mℓ (16.9 US fl oz, 17.6 Imp fl oz) for total brake system.

1) Either jack-up vehicle and place a safety stand under it, or lift-up vehicle.
2) Remove both front and rear wheels.
3) Draw out the brake fluid from reserve tank with syringe.
4) Refill reservoir tank with recommended brake fluid.

Recommended brake fluid:
FMVSS No. 116, fresh DOT3 or 4 brake fluid

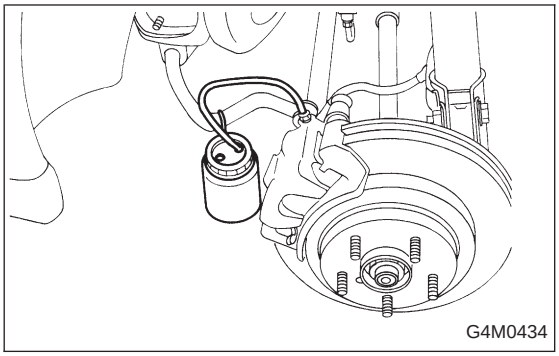
G4M0434

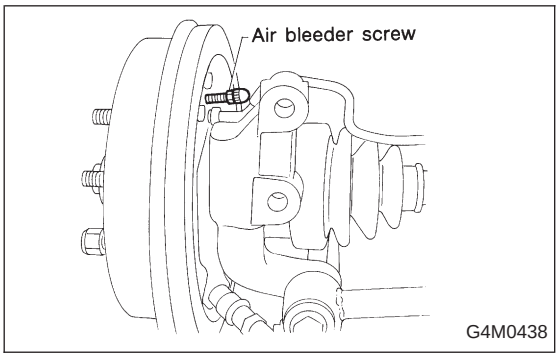

G4M0438

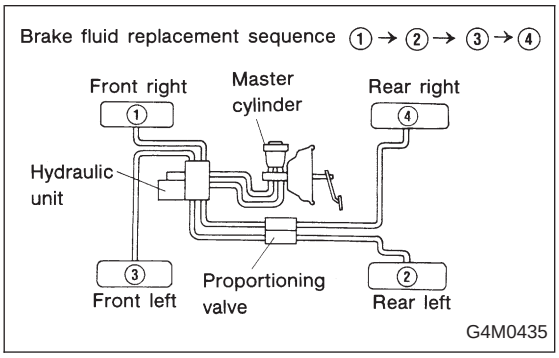

G4M0435

5) Install one end of a vinyl tube onto the air bleeder of and insert the other end of the tube into a container to collect the brake fluid.
6) Instruct your co-worker to depress the brake pedal slowly two or three times and then hold it depressed.
7) Loosen bleeder screw approximately 1/4 turn until a small amount of brake fluid drains into container, and then quickly tighten screw.
8) Repeat steps 6) and 7) above until there are no air bubbles in drained brake fluid and new fluid flows through vinyl tube.

CAUTION:
Add brake fluid as necessary while performing the air bleed operation, in order to prevent the tank from running short of brake fluid.

9) After completing the bleeding operation, hold brake pedal depressed and tighten screw and install bleeder cap.

Tightening torque (Bleeder screw):
8±1 N·m (0.8±0.1 kg-m, 5.8±0.7 ft-lb)

10) Bleed air from each wheel cylinder using the same procedures as described in steps 6) through 7) above.
11) Depress brake pedal with a force of approximately 294 N (30 kg, 66 lb) and hold it there for approximately 20 seconds. At this time check pedal to see if it shows any unusual movement.
Visually inspect bleeder screws and brake pipe joints to make sure that there is no fluid leakage.
12) Install wheels, and drive vehicle for a short distance between 2 to 3 km (1 to 2 miles) to make sure that brakes are operating properly.