1. Front Disc Brake

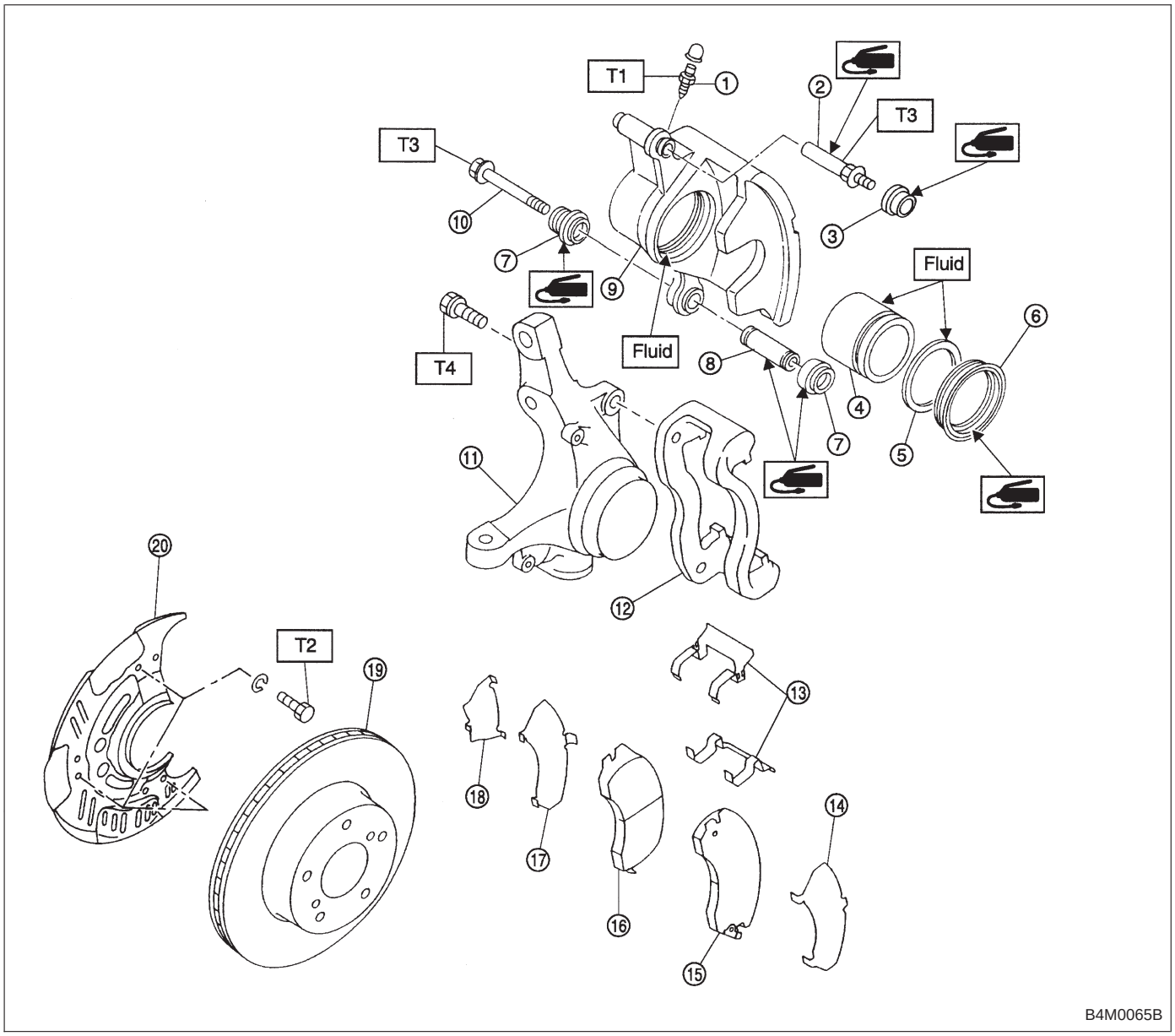

① Air bleeder screw
② Guide pin
③ Guide pin boot
④ Piston
⑤ Piston seal
⑥ Piston boot
⑦ Lock pin boot
⑧ Lock pin sleeve
⑨ Caliper body
⑩ Lock pin
⑪ Housing
⑫ Support
⑬ Pad clip
⑭ Outer shim
⑮ Outer pad
⑯ Inner pad
⑰ Inner shim
⑱ Shim
⑲ Disc rotor
⑳ Disc cover

Tightening torque: N·m (kg-m, ft-lb)
T1: 8±1 (0.8±0.1, 5.8±0.7)
T2: 18±5 (1.8±0.5, 13.0±3.6)
T3: 39±5 (4±0.5, 28.9±3.6)
T4: 78±10 (8.0±1.0, 58±7)

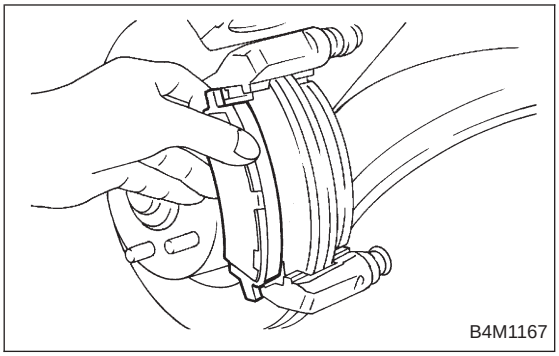

A: ON-CAR SERVICE

1. PAD

1) Remove lock pin.
2) Raise caliper body.
3) Remove pad.

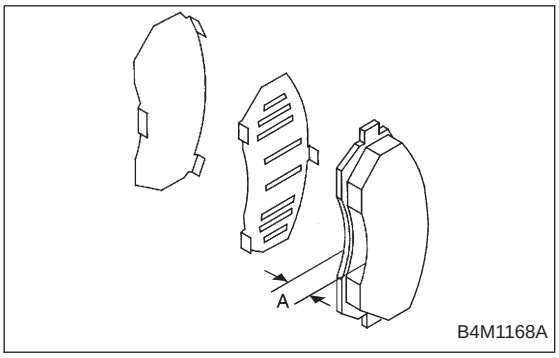

4) Check pad thickness A.

Pad thickness (including back metal) mm (in)	Standard value	17 (0.67)
	Wear limit	7.5 (0.295)

CAUTION:
- **Always replace the pads for both the left and right wheels at the same time. Also replace pad clips if they are twisted or worn.**
- **A wear indicator is provided on the inner disc brake pad. If the pad wears down to such an extent that the end of the wear indicator contacts the disc rotor, a squeaking sound is produced as the wheel rotates. If this sound is heard, replace the pad.**
- **Replace pad if there is oil or grease on it.**

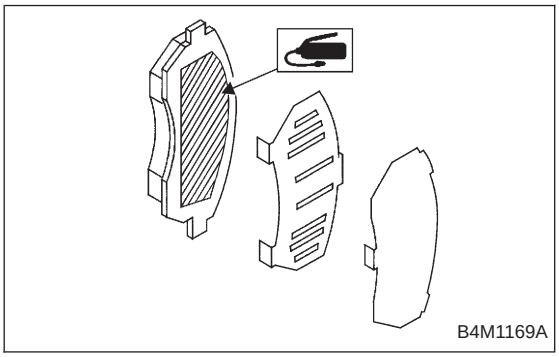

5) Apply thin coat of PBC GREASE (Part No. 003607000) to the frictional portion between pad and pad clip.
6) Install pads on support.
7) Install caliper body on support.

NOTE:
If it is difficult to push piston during pad replacement, loosen air bleeder to facilitate work.

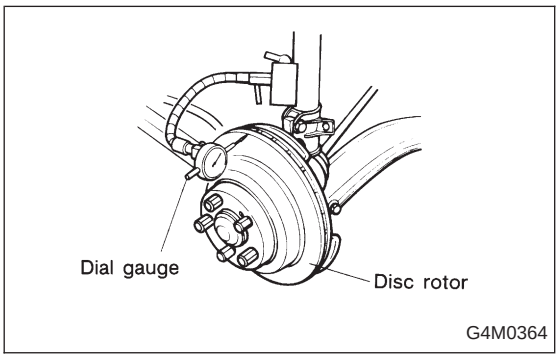

2. DISC ROTOR

1) Install disc rotor by tightening the five wheel nuts.
2) Set a dial gauge on the disc rotor. Turn disc rotor to check runout.

NOTE:
Make sure that dial gauge is set 5 mm (0.20 in) inward of rotor outer perimeter.

Disc rotor runout limit:
0.075 mm (0.0030 in)

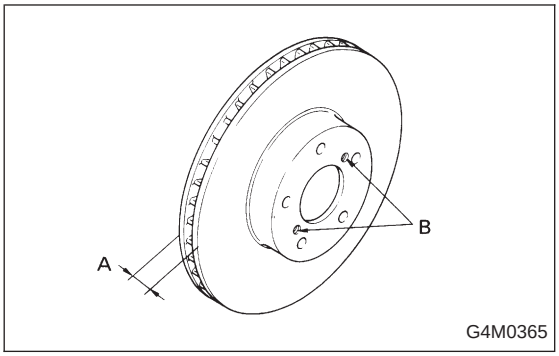

3) Measure disc rotor thickness.

NOTE:
Make sure that micrometer is set 5 mm (0.20 in) inward of rotor outer perimeter.

Disc rotor thickness A mm (in)	Standard value	Service limit	Disc outer dia.
	24.0 (0.945)	22.0 (0.866)	260 (10.24)

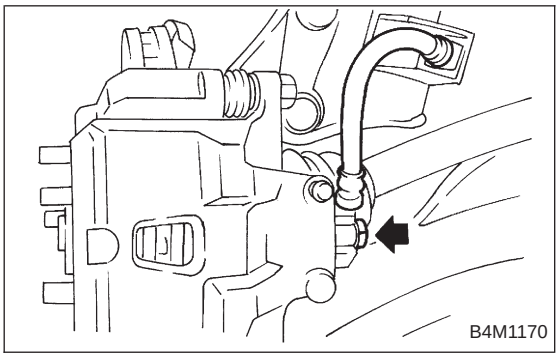

B: REMOVAL

1) Remove union bolt and disconnect brake hose from caliper body assembly.

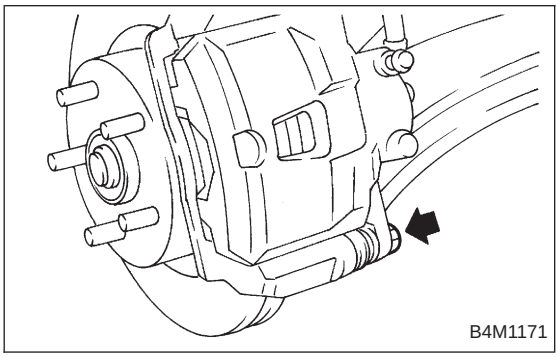

2) Remove bolt securing lock pin to caliper body.
3) Raise caliper body and move it toward vehicle center to separate it from support.

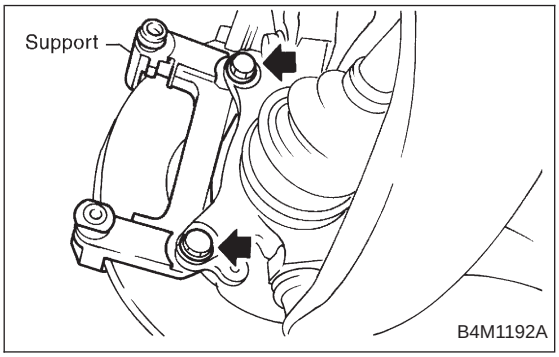

4) Remove support from housing.

NOTE:
Remove support only when replacing it or the rotor. It need not be removed when servicing caliper body assembly.

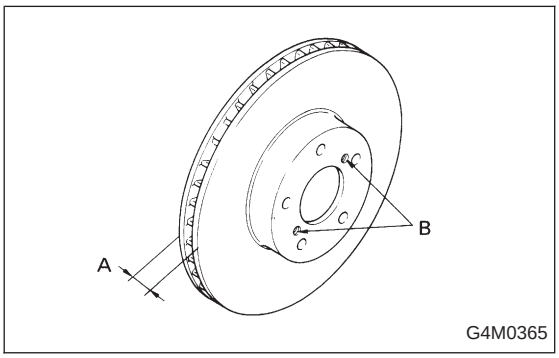

5) Remove disc rotor from hub.

NOTE:
If disc rotor seizes up within hub, drive disc rotor out by installing an 8-mm bolt in holes B on the rotor.

6) Clean mud and foreign particles from caliper body assembly and support.

C: DISASSEMBLY

1. EXCEPT 2500 cc MODEL

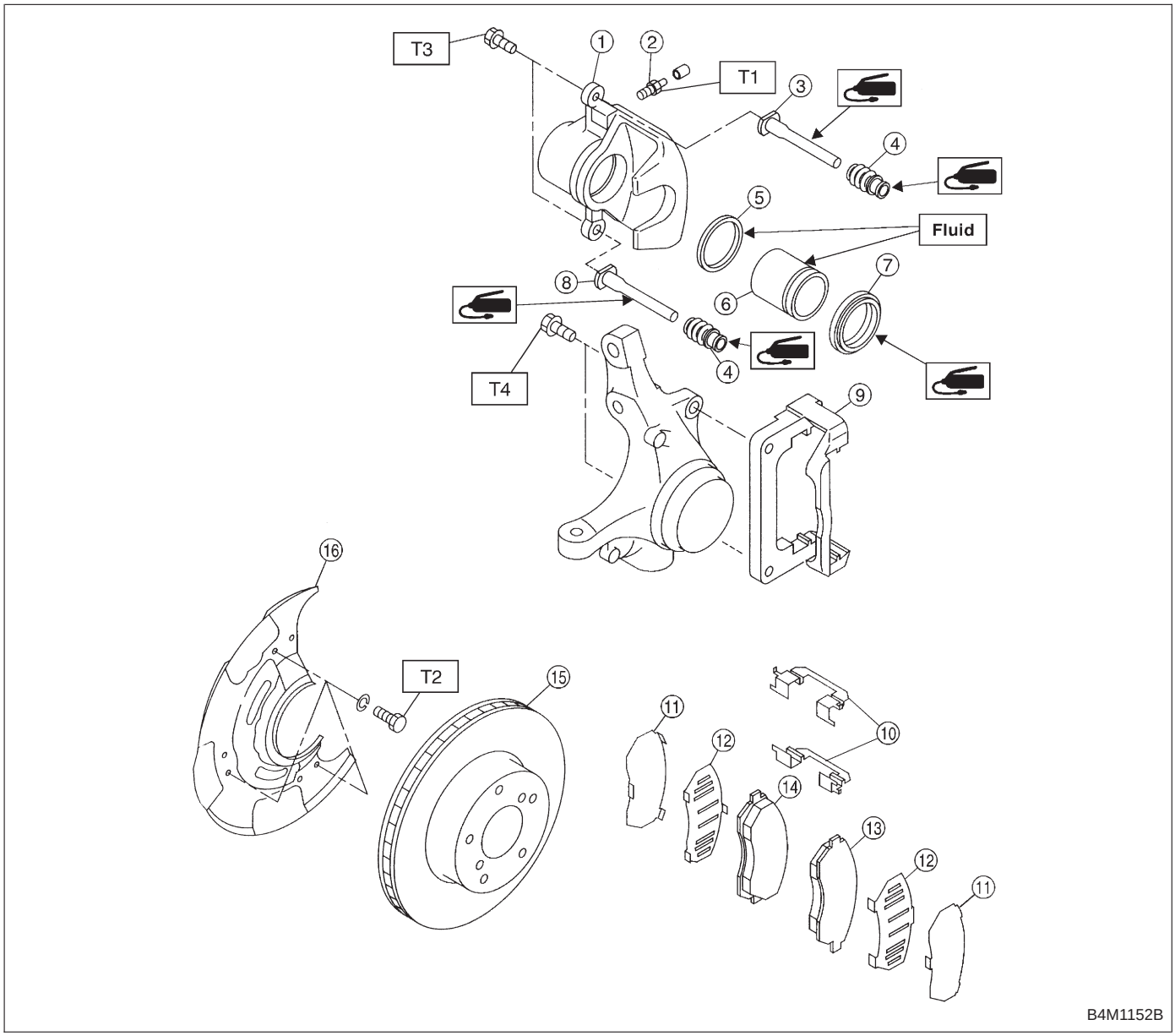

① Caliper body
② Air bleeder screw
③ Guide pin (Green)
④ Pin boot
⑤ Piston seal
⑥ Piston
⑦ Piston boot
⑧ Lock pin (Yellow)
⑨ Support
⑩ Pad clip
⑪ Outer shim
⑫ Inner shim
⑬ Pad (Outside)
⑭ Pad (Inside)
⑮ Disc rotor
⑯ Disc cover

Tightening torque: N·m (kg-m, ft-lb)
T1: 8±1 (0.8±0.1, 5.8±0.7)
T2: 18±5 (1.8±0.5, 13.0±3.6)
T3: 37±5 (3.8±0.5, 27.5±3.6)
T4: 78±10 (8.0±1.0, 58±7)

1) Clean mud and foreign particles from caliper body assembly and support.

CAUTION:
Be careful not to allow foreign particles to enter inlet (at brake hose connector).

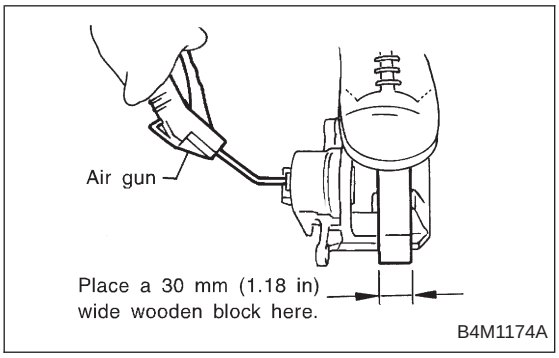

2) Gradually supply compressed air via caliper body brake hose to force piston out.

CAUTION:
- **Place a wooden block as shown in Figure to prevent damage to piston.**
- **Do not apply excessively high-pressure.**

3) Remove piston boot.

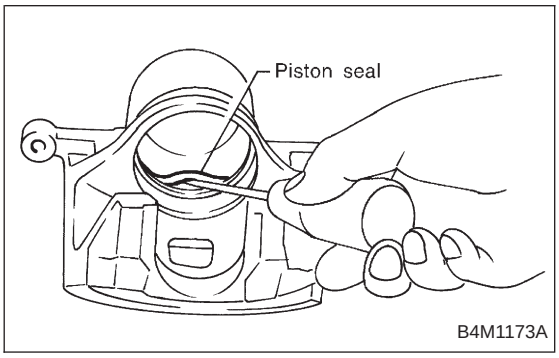

4) Remove piston seal from caliper body cylinder.
5) Remove guide pin and boot from caliper body.

2. 2500 cc MODEL

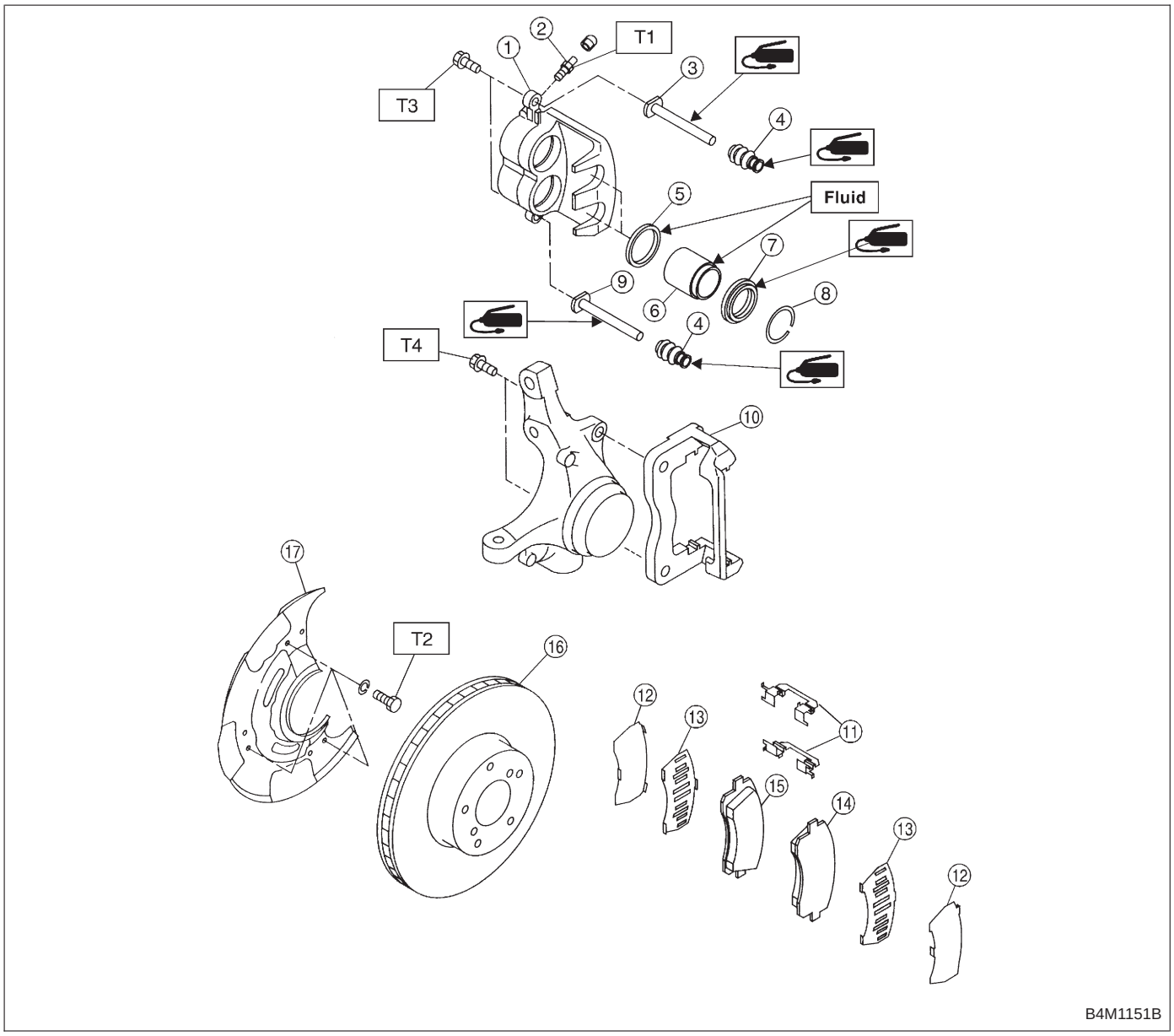

① Caliper body
② Air bleeder screw
③ Guide pin (Green)
④ Pin boot
⑤ Piston seal
⑥ Piston
⑦ Piston boot
⑧ Boot ring
⑨ Lock pin (Yellow)
⑩ Support
⑪ Pad clip
⑫ Outer shim
⑬ Inner shim
⑭ Pad (Outside)
⑮ Pad (Inside)
⑯ Disc rotor
⑰ Disc cover

Tightening torque: N·m (kg-m, ft-lb)
T1: 8±1 (0.8±0.1, 5.8±0.7)
T2: 18±5 (1.8±0.5, 13.0±3.6)
T3: 37±5 (3.8±0.5, 27.5±3.6)
T4: 78±10 (8.0±1.0, 58±7)

1) Clean mud and foreign particles from caliper body assembly and support.

CAUTION:
Be careful not to allow foreign particles to enter inlet (at brake hose connector).

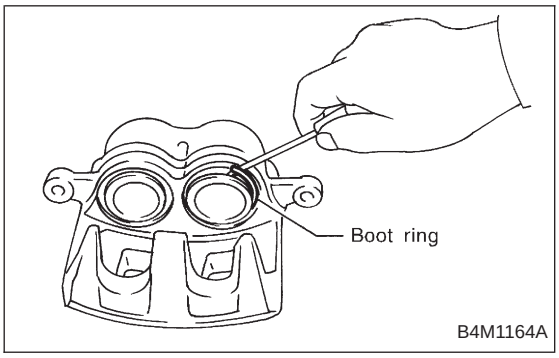

2) Using a standard screwdriver, remove boot ring from piston.

3) Remove boot from piston end.

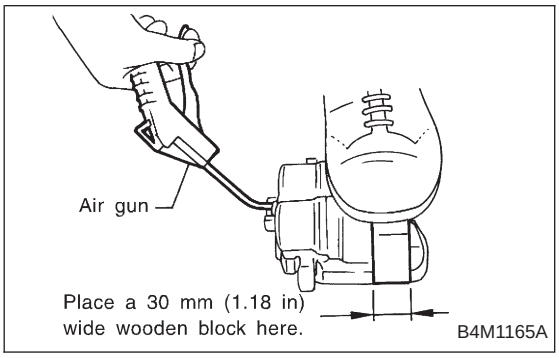

4) Gradually supply compressed air via caliper body brake hose to force piston out.

CAUTION:
Place a wooden block as shown in Figure to prevent damage to piston.

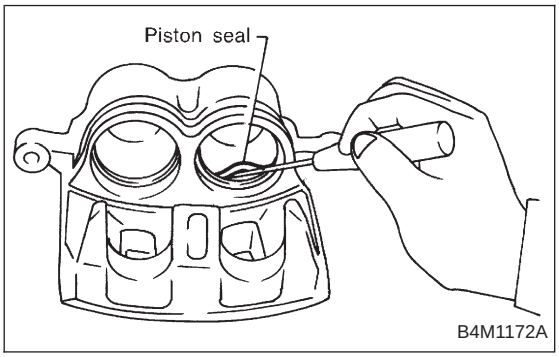

5) Remove piston seal from caliper body cylinder.
6) Remove lock pin boot and guide pin boot.

D: INSPECTION

1) Repair or replace faulty parts.
2) Check caliper body and piston for uneven wear, damage or rust.
3) Check rubber parts for damage or deterioration.

E: ASSEMBLY

1. EXCEPT 2500 cc MODEL

1) Clean caliper body interior using brake fluid.
2) Apply a coat of brake fluid to piston seal and fit piston seal in groove on caliper body.
3) Apply a coat of brake fluid to the entire inner surface of cylinder and outer surface of piston.
4) Apply a coat of specified grease to boot and fit in groove on ends of cylinder and install piston boot onto cylinder.

Grease:
NIGLUBE RX-2 (Part No. 003606000)

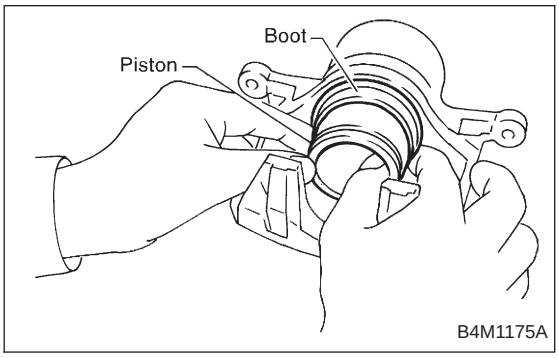

5) Insert piston into cylinder.

CAUTION:
Do not force piston into cylinder.

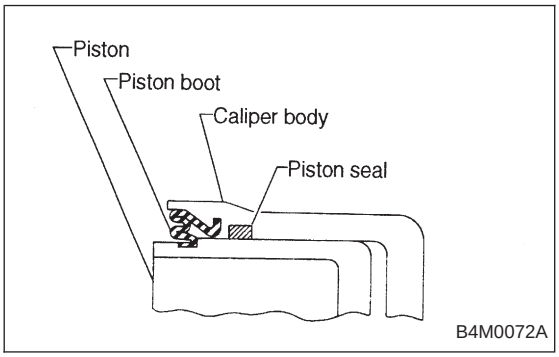

6) Position boot in grooves on cylinder and piston.

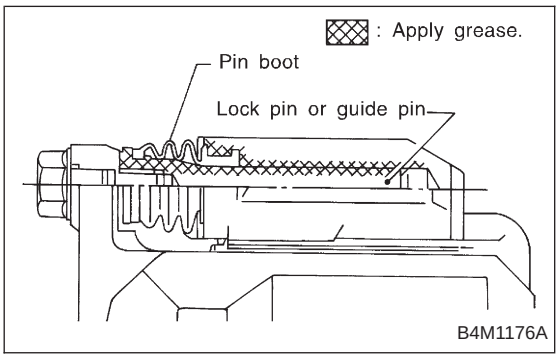

7) Apply a coat of specified grease to lock pin and guide pin outer surface, cylinder inner surface, and boot grooves.

Grease:
NIGLUBE RX-2 (Part No. 003606000)

8) Install lock and guide pin boot on support.

2. 2500 cc MODEL

1) Clean caliper body interior using brake fluid.
2) Apply a coat of brake fluid to piston seal and fit piston seal in groove on caliper body.
3) Apply a coat of brake fluid to the entire inner surface of cylinder and outer surface of piston.

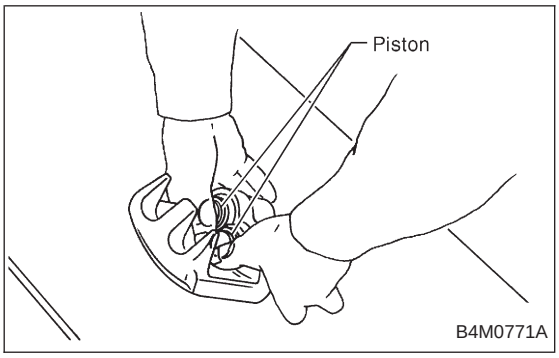

4) Insert piston into cylinder.

CAUTION:
Do not force piston into cylinder.

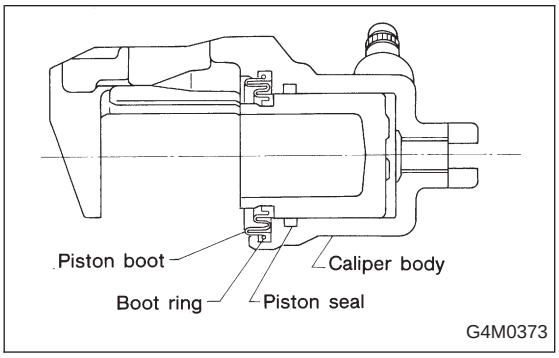

5) Apply a coat of specified grease to boot and fit in groove on ends of cylinder and piston.

Grease:
NIGLUBE RX-2 (Part No. 003606000)

To facilitate installation, fit boot starting with piston end.

6) Position boot in grooves on cylinder and piston.
7) Install boot ring. Be careful not scratch boot.

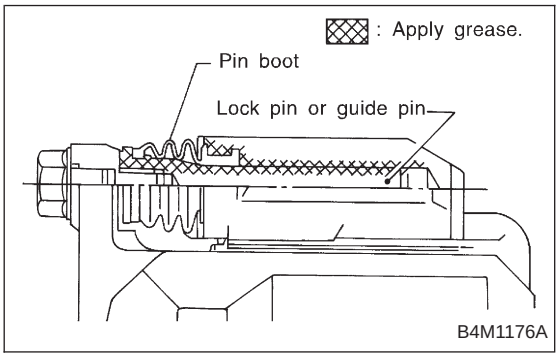

8) Apply a coat of specified grease to lock pin and guide pin, outer surface, cylinder inner surface, and boot grooves.

Grease:
NIGLUBE RX-2 (Part No. 003606000)

9) Install lock pin boot and guide pin boot on support.

F: INSTALLATION

1) Install disc rotor on hub.
2) Install support on housing.

Tightening torque:
78±10 N·m (8±1 kg-m, 58±7 ft-lb)

CAUTION:
● Always replace the pads for both the left and right wheels at the same time. Also replace pad clips if they are twisted or worn.
● A wear indicator is provided on the inner disc brake pad. If the pad wears down to such an extent that the end of the wear indicator contacts the disc rotor, a squeaking sound is produced as the wheel rotates. If this sound is heard, replace the pad.
● When replacing the pad, replace pads of the right and left wheels at the same time.

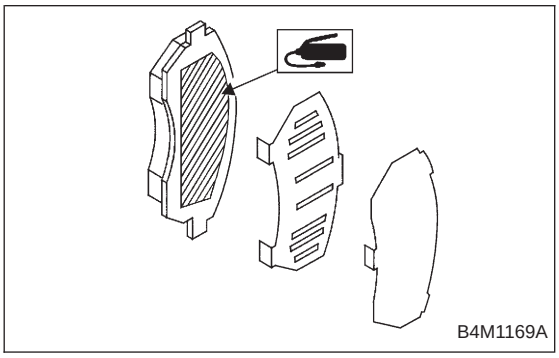

3) Apply thin coat of PBC GREASE (Part No. 003607000) to the frictional portion between pad and pad clip.
4) Install pads, rubber coated shim and stainless shim on support.
5) Install caliper body on support.

Tightening torque:
39±5 N·m (4±0.5 kg-m, 28.9±3.6 ft-lb)

6) Connect brake hose.

Tightening torque:
18±3 N·m (1.8±0.3 kg-m, 13.0±2.2 ft-lb)

CAUTION:
Replace brake hose gaskets with new ones.

7) Bleed air from brake system.