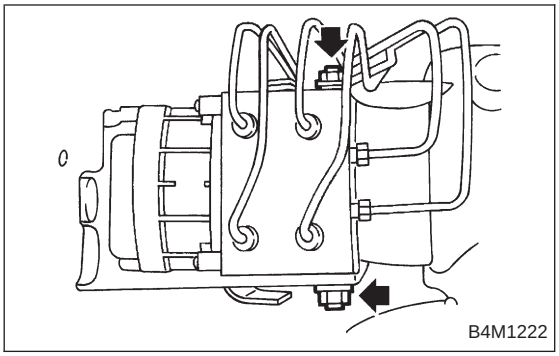

E: INSTALLATION

1) Install ABSCM&H/U.

CAUTION:
Confirm that the specifications of the ABSCM&H/U conforms to the vehicle specifications.

Tightening torque:
18±5 N·m (1.8±0.5 kg-m, 13.0±3.6 ft-lb)

2) Connect brake pipes to their correct ABSCM&H/U connections. <Ref. to 4-4 [W18A4].>

3) Using cable clip, secure ABSCM&H/U harness to bracket.

4) Connect connector to ABSCM&H/U.

CAUTION:
- **Be sure to remove all foreign matter from inside the connector before connecting.**
- **Ensure that the ABSCM&H/U connector is securely locked.**

5) Install air intake duct.
6) Connect ground cable to battery.
7) Bleed air from the brake system.

23. ABS Sensor (ABS 5.3i Type)

<Ref. to 4-4 [W1400].>

24. G Sensor (ABS 5.3i Type)

<Ref. to 4-4 [W1700].>