B: INSPECTION

Check that connector is connected correctly and that connector terminal sliding resistance is correct.

C: INSTALLATION

To install, reverse the removal procedure.

17. G Sensor for ABS System (ABS 5.3 Type)

A: REMOVAL AND INSTALLATION

1) Turn ignition switch to OFF.
2) Remove console box. <Ref. to 5-4 [W1A0].>
3) Disconnect connector form G sensor.

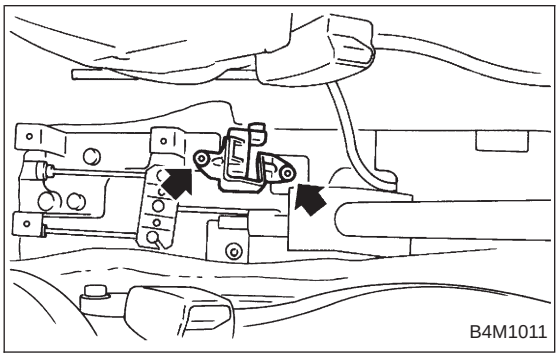

4) Remove G sensor from body.
5) To install, reverse the removal procedure.

CAUTION:
Do not drop or bump G sensor.

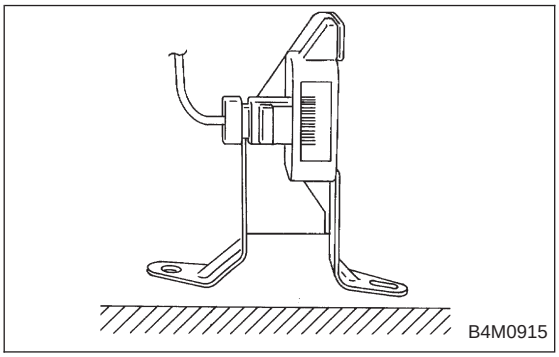

B: INSPECTION

1. USING CIRCUIT TESTER

1) Turn ignition switch to OFF.
2) Remove G sensor from vehicle.
3) Connect connector to G sensor.
4) Turn ignition switch to ON.
5) Measure voltage between G sensor connector terminals.

CHECK : ***Connector & terminal***
(P9) No. 2 (+) — No. 1 (−)
Is voltage 2.3±0.2 V when G sensor is horizontal?

YES : Go to next CHECK .
NO : Replace G sensor.

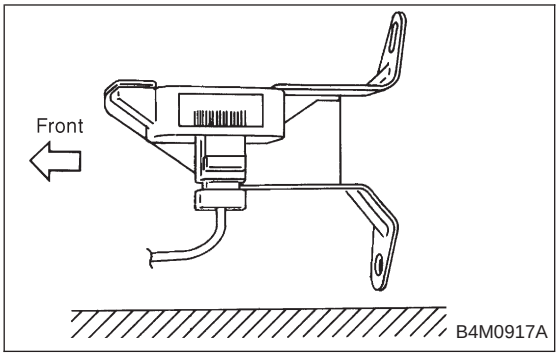

CHECK : ***Connector & terminal (P9) No. 2 (+) — No. 1 (−) Is voltage 3.9±0.2 V when G sensor is inclined forwards to 90°?***

YES : Go to next CHECK .
NO : Replace G sensor.

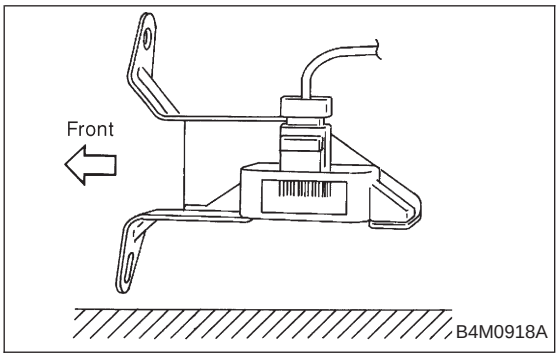

CHECK : ***Connector & terminal (P9) No. 2 (+) — No. 1 (−) Is voltage 0.7±0.2 V when G sensor is inclined backwards to 90°?***

YES : G sensor is normal.
NO : Replace G sensor.

2. USING SELECT MONITOR

1) Turn ignition switch to OFF.

2) Connect select monitor connector to data link connector.

3) Turn select monitor into ABS mode.

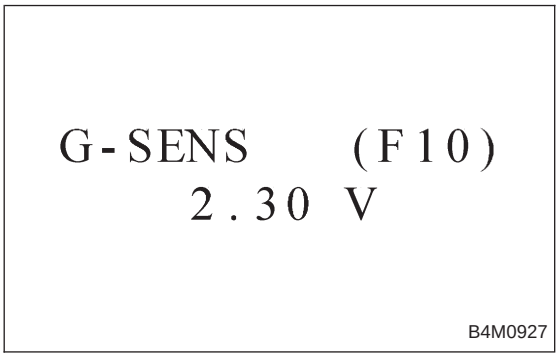

4) Press F, 1 and 0 on the select monitor.

5) Rear the select monitor display.

CHECK : ***Is the indicated reading 2.3±0.2 V when the vehicle is in horizontal position?***

YES : Go to next step 6).
NO : Replace G sensor.

6) Remove console box.

7) Remove G sensor from vehicle. (Do not disconnect connector.)

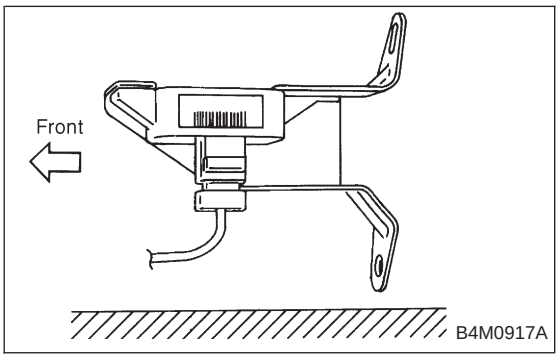

8) Read the select monitor display.

CHECK : ***Is the indicated reading 3.9±0.2 V when G sensor is inclined forwards to 90°?***

YES : Go to next CHECK .
NO : Replace G sensor.

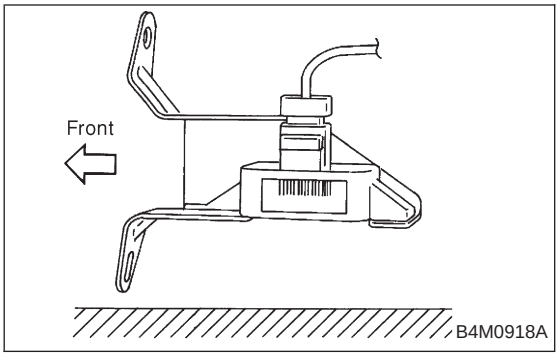

CHECK ***: Is the indicated reading 0.7±0.2 V when G sensor is inclined backwards to 90°?***

YES : G sensor is normal.

NO : Replace G sensor.