15. Hydraulic Unit for ABS System (ABS 5.3 Type)

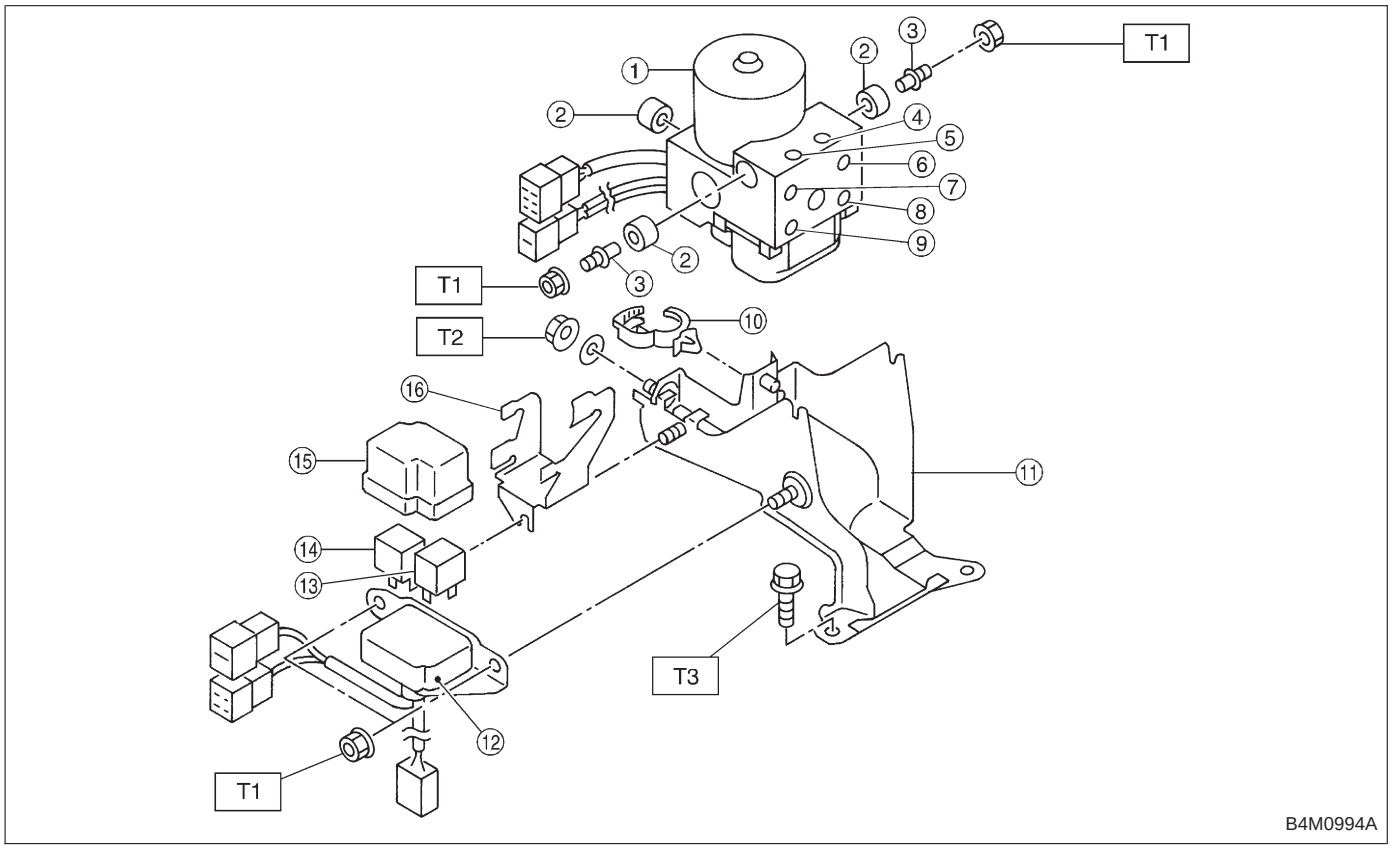

① Hydraulic control unit
② Damper
③ Stud bolt
④ Rear-RH outlet
⑤ Rear-LH outlet
⑥ Secondary inlet
⑦ Primary inlet
⑧ Front-LH outlet
⑨ Front-RH outlet
⑩ Cable clip
⑪ Bracket
⑫ Relay box
⑬ Motor relay
⑭ Valve relay
⑮ Cap
⑯ Connector bracket

Tightening torque: N·m (kg-m, ft-lb)
T1: 18±5 (1.8±0.5, 13.0±3.6)
T2: 29±7 (3.0±0.7, 21.7±5.1)
T3: 32±10 (3.3±1.0, 24±7)

A: REMOVAL

1. HYDRAULIC UNIT

1) Disconnect ground cable from battery.

2) Remove air intake duct and canister from engine compartment to facilitate removal of hydraulic unit.

3) Disconnect connector from hydraulic unit.

4) Unlock cable clip.

5) Disconnect brake pipes from hydraulic unit.

CAUTION:
Wrap brake pipes with vinyl bag to avoid spilling brake fluid on vehicle body.

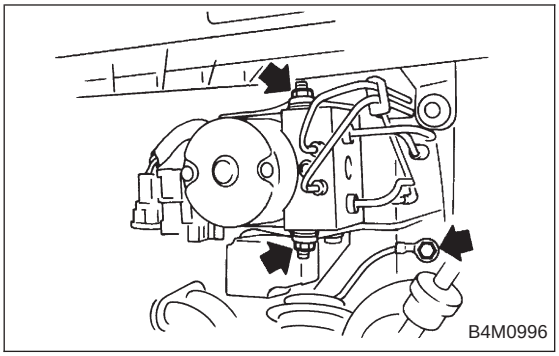

6) Remove nuts and bolt which secure hydraulic unit bracket, and remove hydraulic unit from engine compartment.

CAUTION:
- **Hydraulic unit cannot be disassembled. Do not attempt to loosen bolts and nuts.**
- **Do not drop or bump hydraulic unit.**
- **Do not turn the hydraulic unit upside down or place it on its side.**
- **Be careful to prevent foreign particles from getting into hydraulic unit.**
- **When a new hydraulic unit is installed, apply a coat of rust-preventive wax (Nippeco LT or GB) to bracket attaching bolt after tightening.**
- **Do not pull harness disconnecting harness connector.**

2. RELAY BOX

1) Disconnect ground cable from battery.

2) Remove air intake duct and canister from engine compartment to facilitate removal of relay box.

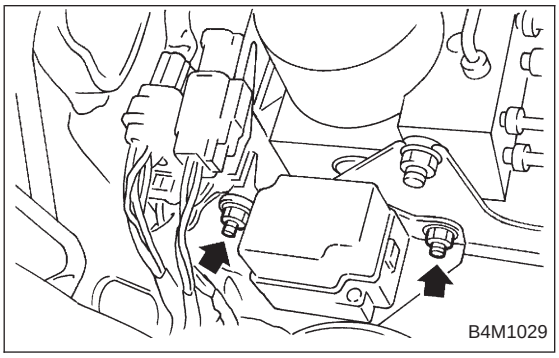

3) Disconnect connector from relay box.

4) Unlock cable clip.

5) Remove nuts which secure relay box, and remove relay box and connector bracket.

CAUTION:
Do not drop or bump relay box.

B: INSPECTION

1) Check connected and fixed condition of connector.
2) Check valve relay and motor relay for discontinuity or short circuits.

	Condition	Terminal number	Standard	Diagram	Terminal location
Valve relay	Turning off electricity.	85 — 86	103±10 Ω	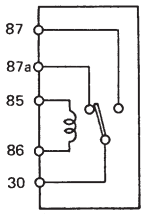 G4M0456	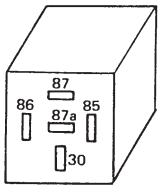 G4M0457
		30 — 87a	less than 0.5 Ω		
		30 — 87	less than 1 MΩ		
	Turning on electricity between 85 and 86. (DC 12 V)	30 — 87a	more than 1 MΩ		
		30 — 87	less than 0.5 Ω		
Motor relay	Turning off electricity.	85 — 86	80±8 Ω	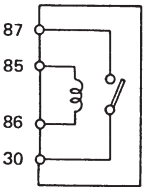 G4M0458	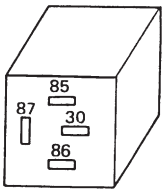 G4M0459
		30 — 87	more than 1 MΩ		
	Turning on electricity between 85 and 86. (DC 12 V)	30 — 87	less than 0.5 Ω		

C: CHECKING THE HYDRAULIC UNIT ABS OPERATION

1. CHECKING THE HYDRAULIC UNIT ABS OPERATION BY PRESSURE GAUGE

1) Lift-up vehicle and remove wheels.

2) Disconnect the air bleeder screws from the FL and FR caliper bodies.

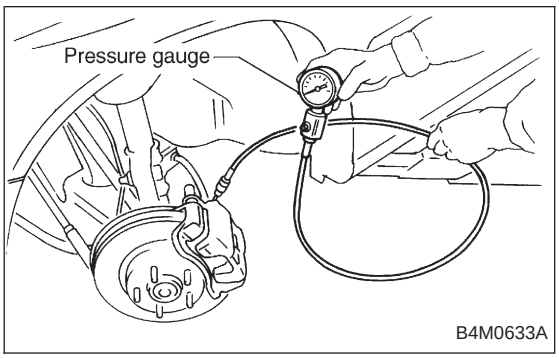

B4M0633A

3) Connect two pressure gauges to the FL and FR caliper bodies.

CAUTION:
- **Pressure gauges used exclusively for brake fluid must be used.**
- **Do not employ pressure gauge previously used for transmission since the piston seal is expanded which may lead to malfunction of the brake.**

NOTE:
Wrap sealing tape around the pressure gauge.

4) Bleed air from the pressure gauges.

5) Perform ABS sequence control.
<Ref. to 4-4 [W15D0].>

6) When the hydraulic unit begins to work, and first the FL side performs decompression, holding, and compression , and then the FR side performs decompression, holding, and compression.

7) Rear values indicated on the pressure gauge and check if the fluctuation of the values between decompression and compression meets the standard values. Also check if any irregular brake pedal tightness is felt.

	Initial value	When decompressed	When compressed
Front wheel	3,432 kPa (35 kg/cm^2, 498 psi)	490 kPa (5 kg/cm^2, 71 psi) or less	3,432 kPa (35 kg/cm^2, 498 psi) or more
Rear wheel	3,432 kPa (35 kg/cm^2, 498 psi)	490 kPa (5 kg/cm^2, 71 psi) or less	3,432 kPa (35 kg/cm^2, 498 psi) or more

8) Remove pressure gauges from FL and FR caliper bodies.

9) Remove air bleeder screws from the RL and RR caliper bodies.

10) Connect the air bleeder screws to the FL and FR caliper bodies.

11) Connect tow pressure gauges to the RL and RR caliper bodies.

12) Bleed air from the pressure gauges and the FL and FR caliper bodies.

13) Perform ABS sequence control.
<Ref. to 4-4 [W15D0].>

14) When the hydraulic unit begins to work, at first the RR side performs decompression, holding, and compression, and then the RL side performs decompression, holding, and compression.

15) Rear values indicated on the pressure gauges and check if they meet the standard value.

16) After checking, remove the pressure gauges from caliper bodies.

17) Connect the air bleeder screws to RL and RR caliper bodies.

18) Bleed air from brake line.

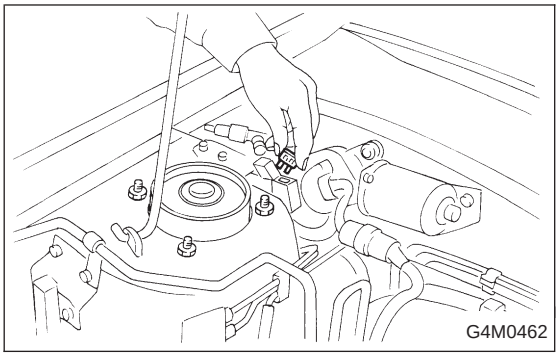

2. CHECKING THE HYDRAULIC UNIT ABS OPERATION WITH BRAKE TESTER

1) In the case of AWD AT vehicles, install a spare fuse with the FWD connector in the engine compartment to simulate FWD vehicles.

2) Prepare for operationing ABS sequence control. <Ref. to 4-4 [W15D1] or 4-4 [W15D2].>

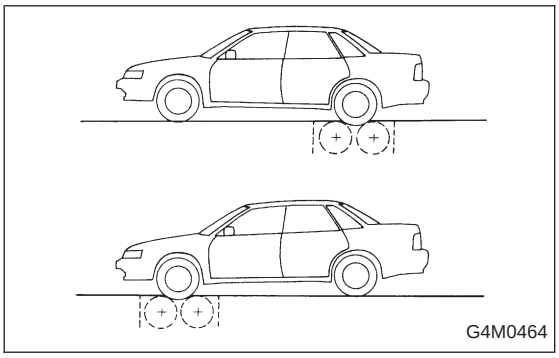

3) Set the front wheels or rear wheels on the brake tester and set the select lever's position at "neutral".
4) Operate the brake tester.
5) Perform ABS sequence control. <Ref. to 4-4 [W15D1] step 1 or 4-4 [W15D2] step 1.>

6) Hydraulic unit begins to work; and check the following working sequence.

(1) The FL wheel performs decompression, holding, and compression in sequence, and subsequently the FR wheel repeats the cycle.

(2) The RR wheel performs decompression, holding, and compression in sequence, and subsequently the RL wheel repeats the cycle.

7) Read values indicated on the brake tester and check if the fluctuation of values, when decompressed and compressed, meet the standard values.

Unit: N (kg, lb)

	Initial value	When decompressed	When compressed
Front wheel	981 (100, 221)	490 (50, 110) or less	981 (100, 221) or more
Rear wheel	981 (100, 221)	490 (50, 110) or less	981 (100, 221) or more

8) After checking, also check if any irregular brake pedal tightness is felt.

D: ABS SEQUENCE CONTROL

1) Under the ABS sequence control, after the hydraulic unit solenoid valve is driven, the operation of the hydraulic unit can be checked by means of the brake tester or pressure gauge.
2) ABS sequence control can be started by diagnosis connector or select monitor.

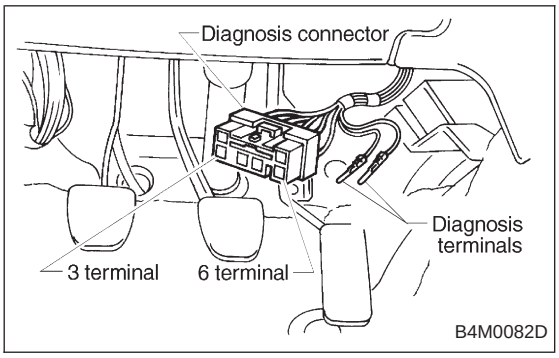

1. OPERATIONAL GUIDELINES OF THE ABS SEQUENCE CONTROL WITH DIAGNOSIS CONNECTOR

1) Connect diagnosis terminals to terminals No. 3 and No. 6 of the diagnosis connector beside driver's seat heater unit.
2) Set the speed of all wheels at 4 km/h (2 MPH) or less.
3) Turn ignition switch OFF.
4) Within 0.5 seconds after the ABS warning light goes out, depress the brake pedal and hold it immediately after ignition switch is turned to ON.

CAUTION:
Do not depress the clutch pedal.

NOTE:
- When the ignition switch is set to on, the brake pedal must not be depressed.
- Engine must not operate.

5) After completion of ABS sequence control, turn ignition switch OFF.

2. OPERATIONAL GUIDELINES OF THE ABS SEQUENCE CONTROL WITH SELECT MONITOR

1) Connect select monitor to data link connector beside driver's seat heater unit.
2) Turn ignition switch ON.
3) Put select monitor to ABS mode.

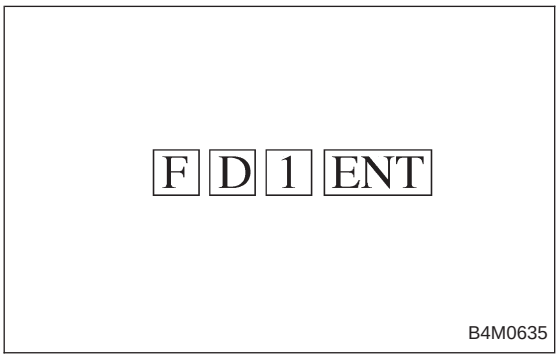

4) Press F D 1 ENT key.

ABS FUNCTION
CHECK MODE

B4M0997

5) The message shown in the figure is displayed.

BRAKE ON
KEEP 100–150

B4M0998

6) The message shown in the figure is displayed as follows:

(1) When using the brake tester, depress brake pedal with braking force of 981 N (100 kg, 221 lb).
(2) When using the pressure gauge, depress brake pedal so as to make the pressure gauge indicate 3,432 kPa (35 kg/cm^2, 498 psi).

CAUTION:
Do not depress the clutch pedal.

MODE START
PRESS ENT KEY

B4M0999

7) When the message shown in the figure is displayed, press ENT key.
8) Check points will be displayed on select monitor.

FUNCTION START
UNABLE

B4M1000

9) When ABS sequence control cannot be started (by system malfunction, etc.), the message shown in the figure will be displayed.

NOTE:
Read the trouble codes. Repair faulty parts.

ABS FUNCTION
CHECK END

B4M1030

10) After completion of ABS sequence control, turn ignition switch OFF.

3. CONDITIONS FOR COMPLETION OF ABS SEQUENCE CONTROL

When the following conditions develop, the ABS sequence control stops and ABS operation is returned to the normal control mode.

1) When the speed of at least one wheel reaches 10 km/h (6 MPH).
2) When terminal No. 3 or No. 6 are separated from diagnosis terminals. (When select monitor is not used.)
3) When the brake pedal is released during sequence control and the braking lamp switch is set to off.
4) When brake pedal is depressed after ignition key is turned to ON, and before ABS warning light goes out. (When select monitor is not used.)
5) When brake pedal is not depressed after ignition key is turned to ON, and within 0.5 seconds after ABS warning light goes out. (When select monitor is not used.)
6) After completion of the sequence control.
7) When malfunction is detected. (When select monitor is used.)

4. CONDITIONS FOR ABS SEQUENCE CONTROL

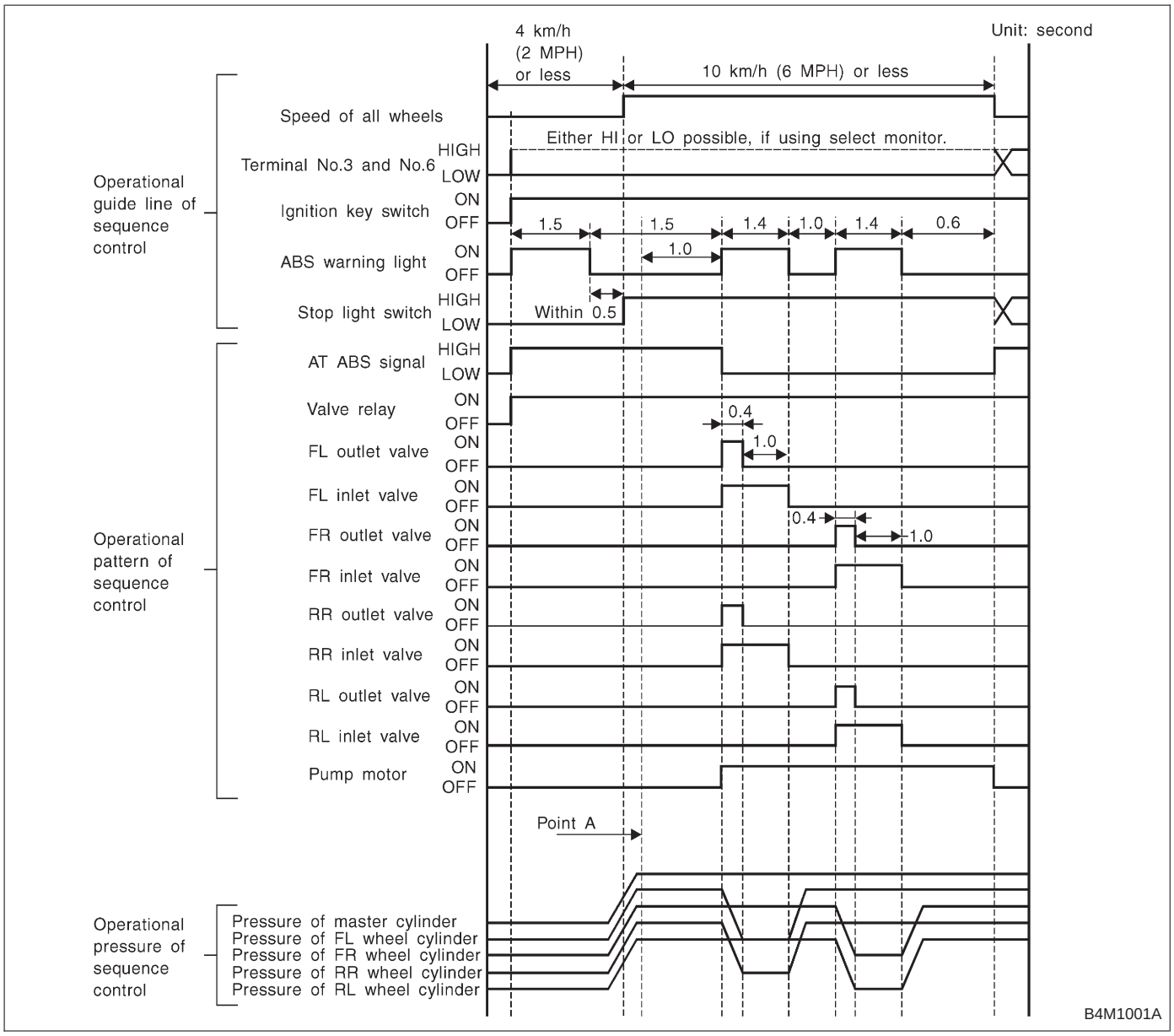

NOTE:
- When select monitor is used, control operation starts at point A. The patterns from IGN key ON to the point A show that operation is started by diagnosis connector.
- HIGH means high voltage.
- LOW means low voltage.

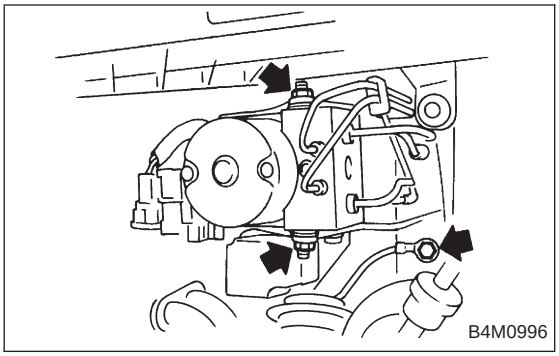

E: INSTALLATION

1. HYDRAULIC UNIT

1) Install hydraulic unit.

Tightening torque:
18±5 N·m (1.8±0.5 kg-m, 13.0±3.6 ft-lb)

2) Connect hydraulic unit ground cable to body.

Tightening torque:
32±10 N·m (3.3±1.0 kg-m, 24±7 ft-lb)

3) Connect brake pipes to their correct hydraulic unit connections. <Ref. to 4-4 [W18A4].>

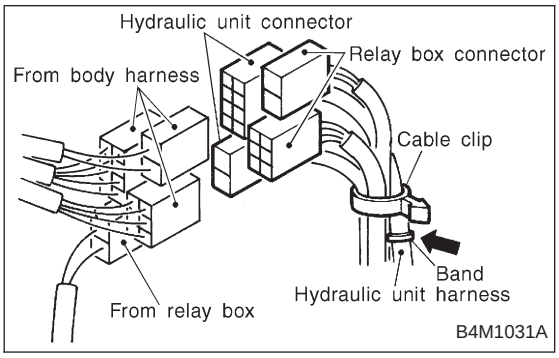

4) Secure hydraulic unit connector to connector bracket.

CAUTION:
Align connector wit mating receptacle.

5) Using cable clip, secure hydraulic unit harness to relay box harness.

CAUTION:
Make sure hydraulic unit harness band is secured beneath cable clip.

6) Connect connector to hydraulic unit.
7) Install canister.
8) Install air intake duct.
9) Connect ground cable to battery.
10) Bleed air from the brake system.

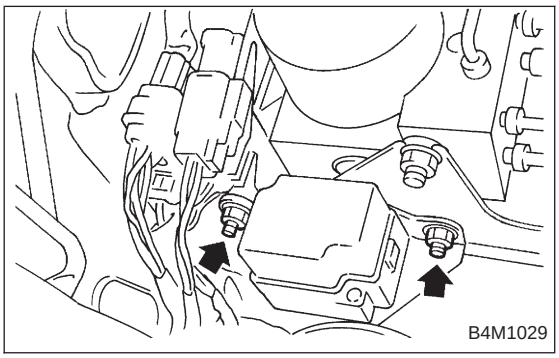

2. RELAY BOX

1) Install relay box and connector bracket.

Tightening torque:
18±5 N·m (1.8±0.5 kg-m, 13.0±3.6 ft-lb)

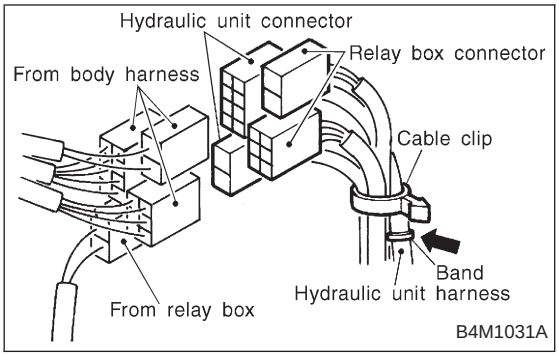

2) Secure relay box connector to connector bracket.

CAUTION:
Align connector wit mating receptacle.

3) Using cable clip, secure hydraulic unit harness to relay box harness.

CAUTION:
Make sure hydraulic unit harness band is secured beneath cable clip.

4) Connect connector to relay box.
5) Install canister.
6) Install air intake duct.
7) Connect ground cable to battery.

16. ABS Control Module (ABS 5.3 Type)

A: REMOVAL

1. LHD MODEL

1) Turn ignition switch to OFF.
2) Remove front pillar lower trim.
3) Remove glove box.
4) Remove glove box bracket.

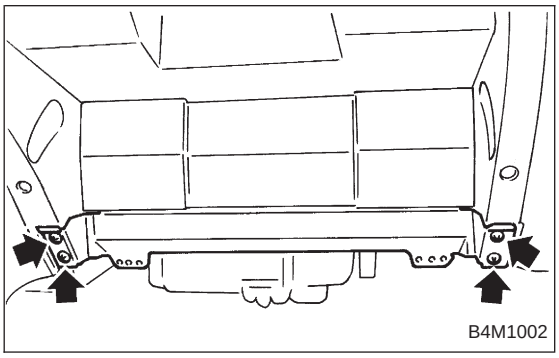

5) Remove pocket back panel.

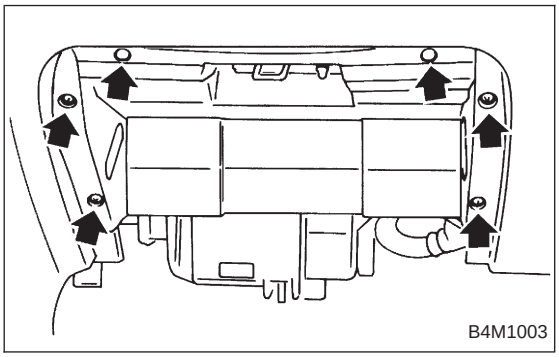
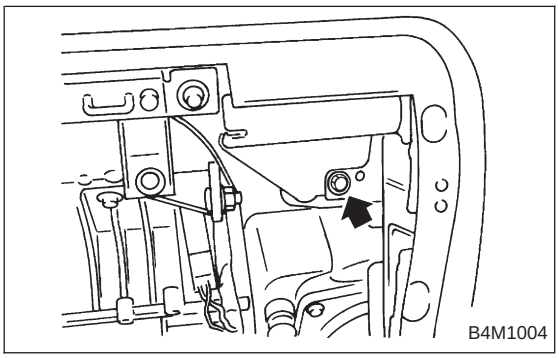
6) Remove bolt from bracket.