20. Hydraulic Unit for ABS/TCS System

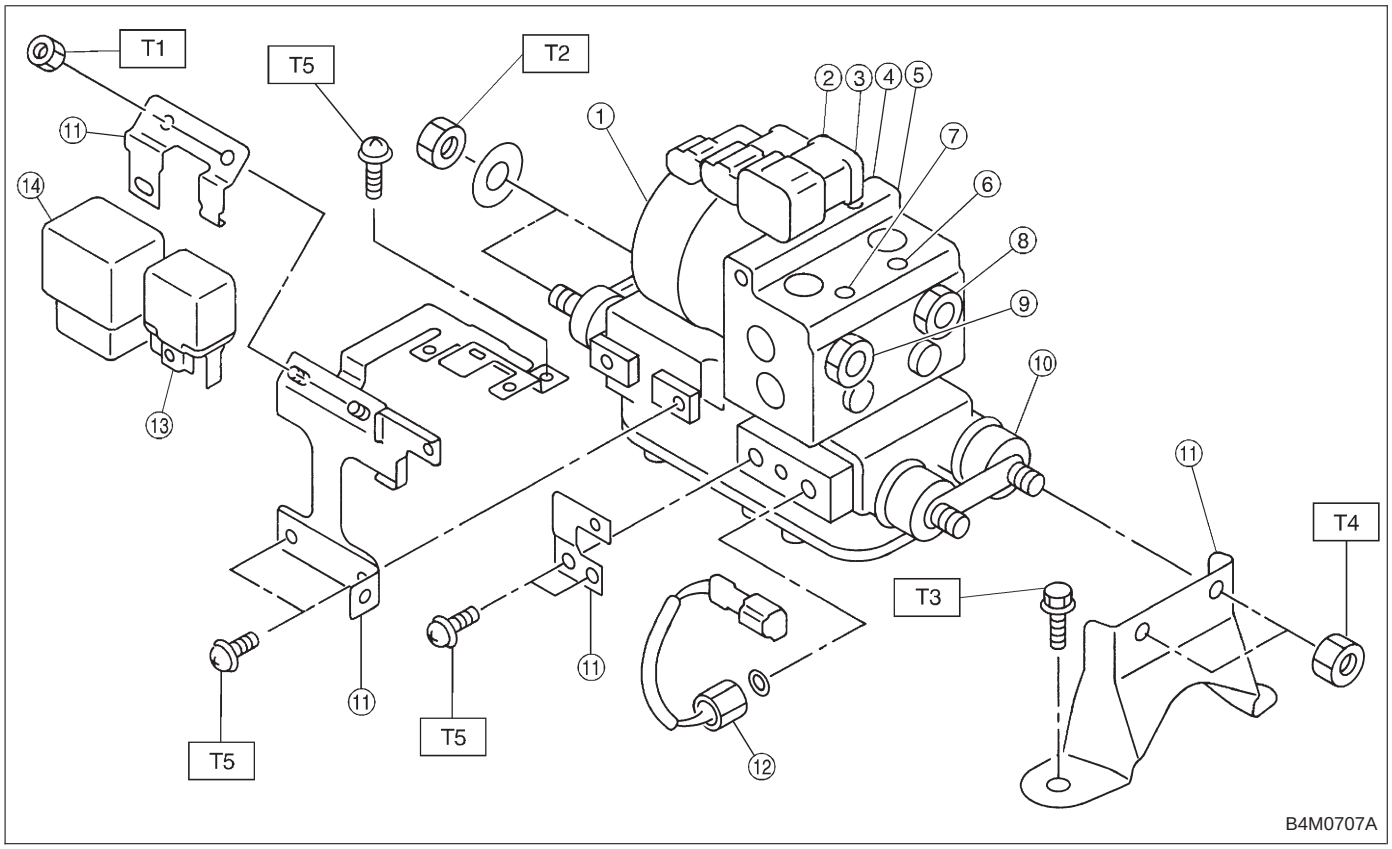

① ABS/TCS hydraulic control unit
② Rear-RH outlet
③ Front-LH outlet
④ Front-RH outlet
⑤ Rear-LH outlet
⑥ Secondary inlet
⑦ Primary inlet
⑧ Secondary suction line
⑨ Primary suction line
⑩ Bumper
⑪ Bracket
⑫ Pressure switch
⑬ Valve relay
⑭ Motor relay

Tightening torque: N·m (kg-m, ft-lb)
T1: 7.4±2.0 (0.75±0.2, 5.4±1.4)
T2: 29±7 (3.0±0.7, 21.7±5.1)
T3: 32±10 (3.3±1.0, 24±7)
T4: 38±10 (3.8±1.0, 27±7)
T5: 3.1±1 (0.32±0.1, 2.3±0.7)

A: REMOVAL

1) Disconnect ground cable from battery.
2) Remove canister, air intake and air cleaner case duct from engine compartment to facilitate removal of hydraulic unit.
3) Disconnect brake pipes from hydraulic unit.

CAUTION:
Wrap brake pipes with vinyl bag to avoid spilling brake fluid on vehicle body.

4) Disconnect connector from hydraulic unit.

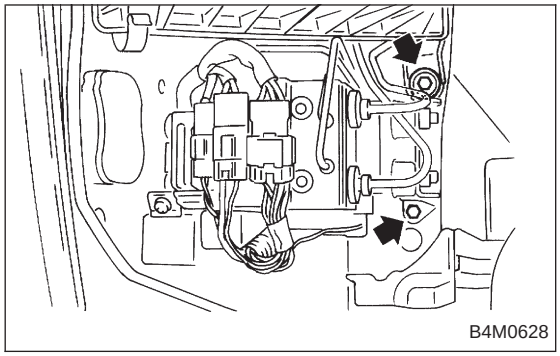

5) Remove bolts which secure hydraulic unit bracket, and remove hydraulic unit from engine compartment.

CAUTION:

- **Hydraulic unit cannot be disassembled. Do not attempt to loosen bolts and nuts.**
- **Do not drop or bump hydraulic unit.**
- **Do not turn the hydraulic unit upside down or place it on its side.**
- **Be careful to prevent foreign particles from getting into hydraulic unit.**
- **Do not pull harness disconnecting harness connector.**

B: INSPECTION

1) Check connected and fixed condition of connector.
2) Check for discontinuity or short circuits.

	Condition	Terminal number	Standard	Diagram	Terminal location
Valve relay	Turning off electricity.	A — B	90 Ω	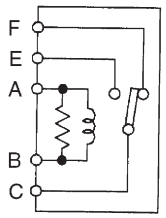 B4M0629A	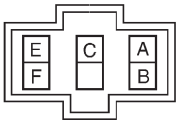 B4M0630
		C — F	0 Ω		
		C — E	∞		
	Turning on electricity between A and B. (DC 12 V)	C — F	∞		
		C — E	0 Ω		
Motor relay	Turning off electricity.	a — b*	57 Ω	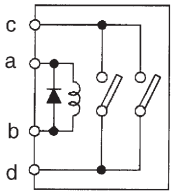 B4M0631A	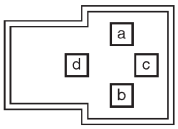 B4M0632
		c — d	∞		
	Turning on electricity between a and b. (DC 12 V)	c — d	0 Ω		

*: Attach circuit tester positive probe to terminal “a” and its negative probe to terminal “b” and measure the circuit resistance.

C: CHECKING THE HYDRAULIC UNIT ABS OPERATION

1. CHECKING THE HYDRAULIC UNIT ABS OPERATION BY PRESSURE GAUGE

1) Lift-up vehicle and remove wheels.
2) Disconnect the air bleeder screws from the FL and FR caliper bodies.

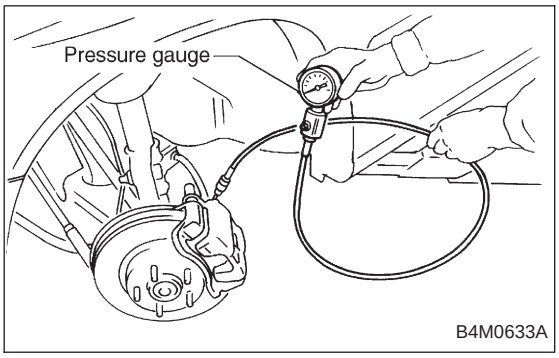

3) Connect two pressure gauges to the FL and FR caliper bodies.

CAUTION:
- **Pressure gauges used exclusively for brake fluid must be used.**
- **Do not employ pressure gauge previously used for transmission since the piston seal is expanded which may lead to malfunction of the brake.**

NOTE:
Wrap sealing tape around the pressure gauge.

4) Bleed air from the pressure gauges.
5) Perform ABS sequence control. <Ref. to 4-4 [W20D0].>
6) When the hydraulic unit begins to work, and first the FL side performs decompression, holding, and compression, and then the FR side performs decompression, holding, and compression.
7) Read values indicated on the pressure gauge and check if the fluctuation of the values between decompression and compression meets the standard values. Also check if any irregular brake pedal tightness is felt.

	Initial value	When decompressed	When compressed
Front wheel	3,432 kPa (35 kg/cm^2, 498 psi)	490 kPa (5 kg/cm^2, 71 psi) or less	981 kPa (10 kg/cm^2, 142 psi) or more
Rear wheel	3,432 kPa (35 kg/cm^2, 498 psi)	490 kPa (5 kg/cm^2, 71 psi) or less	981 kPa (10 kg/cm^2, 142 psi) or more

8) Remove pressure gauges and air bleeder screws from the RL and RR caliper bodies.
9) Connect the air bleeder screws hose to the FL and FR caliper bodies.
10) Connect two pressure gauges to the RL and RR caliper bodies.
11) Bleed air from the pressure gauges and the FL and FR caliper bodies.
12) Perform ABS sequence control. <Ref. to 4-4 [W20D0].>
13) When the hydraulic unit begins to work, at first the RR side performs decompression, holding, and compression, and then the RL side performs decompression, holding, and compression.
14) Read values indicated on the pressure gauges and check if they meet the standard value.

15) After checking, remove the pressure gauges from caliper bodies.
16) Connect the air bleeder screws to RL and RR caliper bodies.
17) Bleed air from brake line.

2. CHECKING THE HYDRAULIC UNIT ABS OPERATION WITH BRAKE TESTER

1) Prepare for operating ABS sequence control. <Ref. to 4-4 [W20D1] or 4-4 [W20D2].>

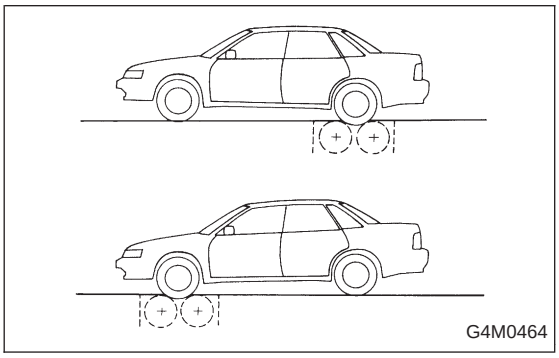

2) Set the front wheels or rear wheels on the brake tester and set the select lever's position at "neutral".
3) Operate the brake tester.
4) Perform ABS sequence control. <Ref. to 4-4 [W20D1] step 1 or 4-4 [W20D2] step 1.>
5) Hydraulic unit begins to work; and check the following working sequence.
   (1) The front left wheel performs decompression, holding, and compression in sequence, and subsequently the front right wheel repeats the cycle.
   (2) The rear right wheel performs decompression, holding, and compression in sequence, and subsequently the rear left wheel repeats the cycle.
6) Read values indicated on the brake tester and check if the fluctuation of values, when decompressed and compressed, meet the standard values.

Unit: N (kg, lb)

	Initial value	When decompressed	When compressed
Front wheel	981 — 1,471 (100 — 150, 221 — 331)	245 (25, 55) or less	588 (60, 132) or more
Rear wheel	981 — 1,471 (100 — 150, 221 — 331)	245 (25, 55) or less	588 (60, 132) or more

7) After checking, also check if any irregular brake pedal tightness is felt.

D: ABS SEQUENCE CONTROL

1) Under the ABS sequence control, after the hydraulic unit solenoid valve is driven, the operation of the hydraulic unit can be checked by means of the brake tester or pressure gauge.
2) ABS sequence control can be started by diagnosis connector or select monitor.

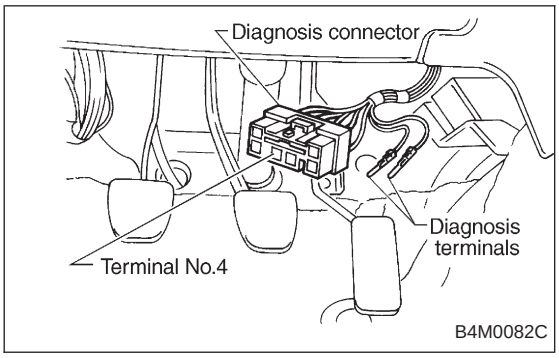

1. OPERATIONAL GUIDELINES OF THE ABS SEQUENCE CONTROL WITH DIAGNOSIS CONNECTOR

1) Connect diagnosis terminals to terminal No. 4 of the diagnosis connector beside driver's seat heater unit.
2) Ignition switch is turned to ON.
3) Make sure only the start code (code 11) is shown in normal condition. <Ref. to 4-4b [T6D1].>

NOTE:
When trouble codes are stored in memory, repair the faulty parts.

4) Set the speed of all wheels at 10 km/h (6 MPH) or less.
5) Turn ignition switch OFF.
6) Within 0.5 seconds after the ABS and TCS warning lights go out, depress the brake pedal and hold it immediately after engine starts.

NOTE:
- When the ignition switch is set to on, the brake pedal must not be depressed.
- Engine must operate.
- If brake pedal is not depressed within 0.5 seconds after ABS and TCS warning lights go out, the trouble code mode comes on.

7) After completion of ABS sequence control, turn ignition switch OFF.

2. OPERATIONAL GUIDELINES OF THE ABS SEQUENCE CONTROL WITH SELECT MONITOR

1) Connect select monitor to data link connector beside driver's seat heater unit. <Ref. to 4-4 [W19D0] step 1).>
2) Engine starts.
3) Put select monitor to TCS mode.
4) put select monitor to FBI mode. Make sure code 11 is indicated.

NOTE:
When trouble codes are stored in memory, repair the faulty parts.

F D 1 ENT

B4M0635

4) Press FD1 ENT key.

BRAKE-ON

KEEP 100-150

B4M0634

5) The message shown in the figure is displayed as follows:

(1) When using the brake tester, depress brake pedal with braking force of 981 to 1,471 N (100 to 150 kg, 221 to 331 lb).

(2) When using the pressure gauge, depress brake pedal so as to make the pressure gauge indicate 3,432 kPa (35 kg/cm^2, 498 psi)

MODE START

PRESS ENT KEY

B4M0624

6) When the message shown in the figure is displayed, press ENT key.

7) Checked portions will be displayed on select monitor.

FUNCTION START

UNABLE

B4M0627

8) When ABS sequence control cannot be started (by system malfunction, etc.), the message shown in the figure will be displayed.

NOTE:
Read the trouble codes. Repair faulty parts.

9) After completion of ABS sequence control, turn ignition switch OFF.

3. CONDITIONS FOR COMPLETION OF ABS SEQUENCE CONTROL

When the following conditions develop, the ABS sequence control stops and ABS and TCS warning lights come on while the ABS and TCS function will then stop. The brake system functions as a conventional brake system.

1) When the speed of at least one wheel reaches 10 km/h (6 MPH).
2) When terminal No.4 is separated from ground. (When select monitor is not used.)
3) When the brake pedal is released during sequence control and the braking lamp switch is set to off.
4) After completion of the sequence control.
5) When malfunction is detected.

NOTE:
When malfunction has been detected and the ABS sequence control operation has stopped, the trouble codes are stored in memory.

4. CONDITIONS FOR ABS SEQUENCE CONTROL

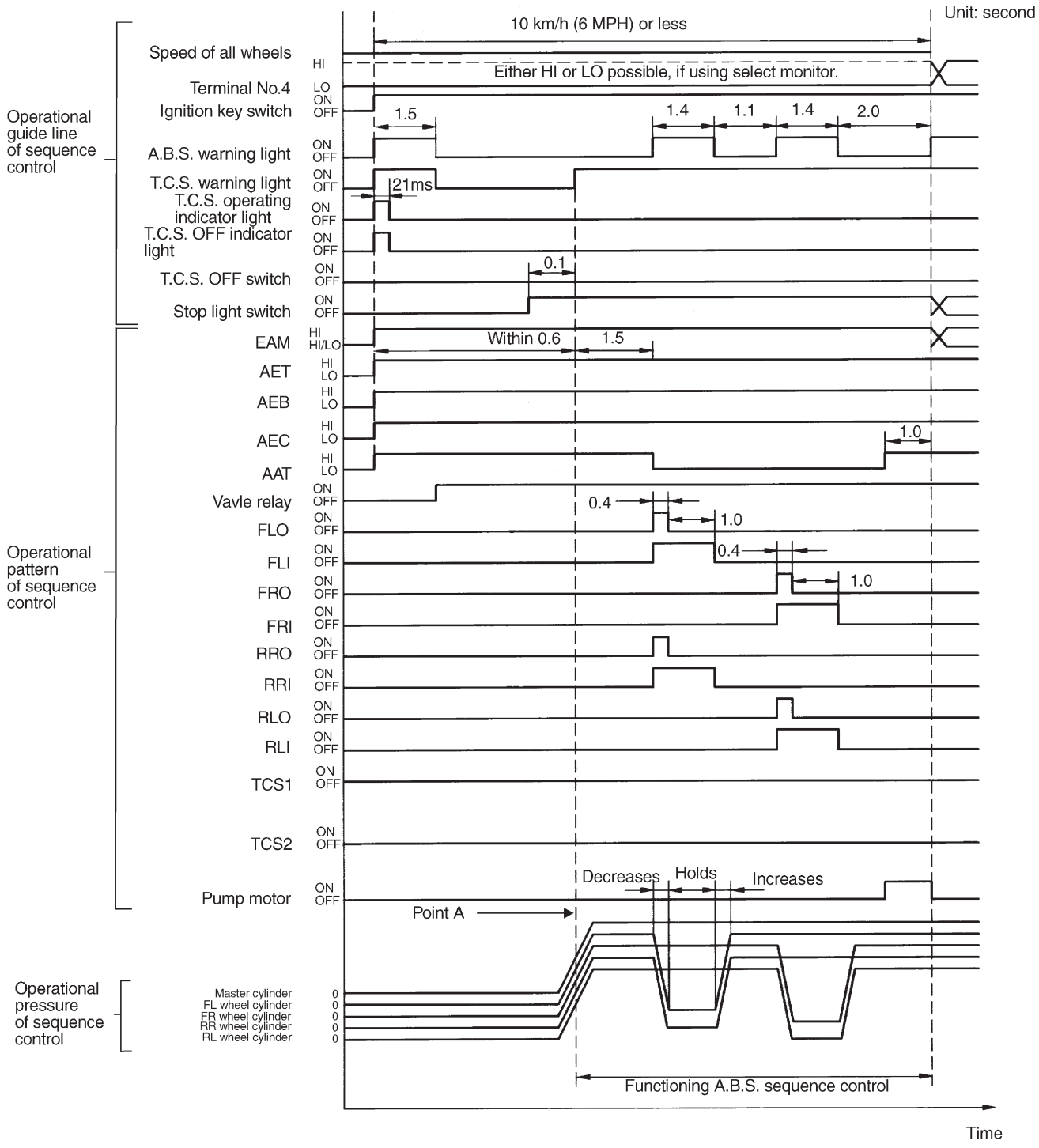

NOTE:
When select monitor is used, control operation starts at point A. It is not required to operate brake lamp switch for starting ABS sequence control operation. The patterns from IGN key ON to the point A show that operation is started by diagnosis connector.

E: CHECKING THE HYDRAULIC UNIT TCS OPERATION

1. CHECKING THE HYDRAULIC UNIT TCS OPERATION BY PRESSURE GAUGE

1) Lift-up vehicle and remove wheels.
2) Disconnect the air bleeder screws from the FL and FR caliper bodies.

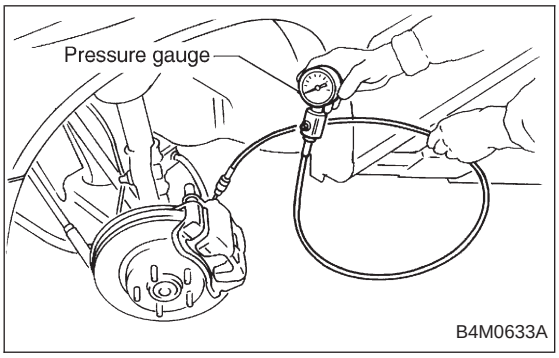

3) Connect two pressure gauges to the FL and FR caliper bodies.

CAUTION:
- **Pressure gauges used exclusively for brake fluid must be used.**
- **Do not employ pressure gauge previously used for transmission since the piston seal is expanded which may lead to malfunction of the brake.**

NOTE:
Wrap sealing tape around the pressure gauge.

4) Bleed air from the pressure gauges.
5) Perform sequence control. <Ref. to 4-4 [W20F0].>
6) When the hydraulic unit begins to work, and first the FL side performs compression, holding, and decompression, and then the FR side performs compression, holding, and decompression.
7) Read values indicated on the pressure gauge and check if the fluctuation of the values between compression and decompression meets the standard values. Also check if any irregular brake pedal tightness is felt.

	Initial value	When compressed	When decompressed
Front left wheel	490 kPa (5 kg/cm^2, 71 psi) or less	1,471 kPa (15 kg/cm^2, 213 psi) or more	490 kPa (5 kg/cm^2, 71 psi) or less
Front right wheel	490 kPa (5 kg/cm^2, 71 psi) or less	1,471 kPa (15 kg/cm^2, 213 psi) or more	490 kPa (5 kg/cm^2, 71 psi) or less

8) After checking, remove the pressure gauges from the caliper bodies.
9) Connect the air bleeder screws to the FL and FR caliper bodies.
10) Bleed air from brake line.

2. CHECKING THE HYDRAULIC UNIT TCS OPERATION WITH BRAKE TESTER

1) Prepare for operating TCS sequence control. <Ref. to 4-4 [W20F1] step 1 or 4-4 [W20F2] step 1.>

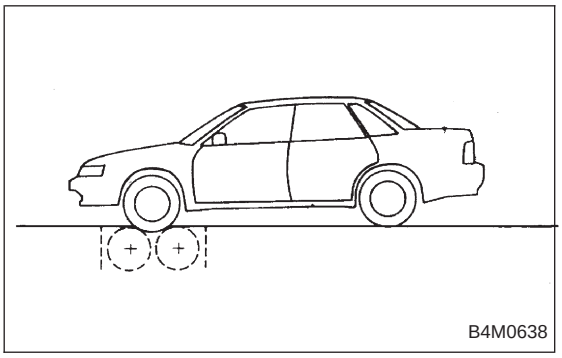

2) Set the front wheels on the brake tester and set the select lever's position at "neutral".

3) Operate the brake tester.
4) Perform sequence control. <Ref. to 4-4 [W20F1] or 4-4 [W20F2].>
5) Hydraulic unit begins to work; and check the following working sequence.

The front left wheel performs compression, holding, and decompression in sequence, and subsequently the front right wheel repeats the cycle.

6) Read values indicated on the brake tester and check if the fluctuation of values, when decompressed and compressed, meet the standard values.

	When compressed	When decompressed
Front left wheel	981 — 1,471 N (100 — 150 kg, 221 — 331 lb)	245 N (25 kg, 55 lb) or less
Front right wheel	981 — 1,471 N (100 — 150 kg, 221 — 331 lb)	245 N (25 kg, 55 lb) or less

F: TCS SEQUENCE CONTROL

1) Under the TCS sequence control, after the hydraulic unit solenoid valve is driven, the operation of the hydraulic unit can be checked by means of the brake tester or pressure gauge.
2) TCS sequence control can be started by diagnosis connector or select monitor.

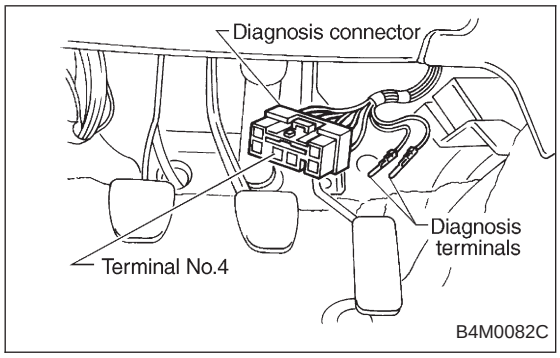

1. OPERATIONAL GUIDELINES OF THE TCS SEQUENCE CONTROL WITH DIAGNOSIS CONNECTOR

1) Connect diagnosis terminals to terminal No. 4 of the diagnosis connector beside driver seat heater unit.
2) Ignition switch is turned to ON.
3) Make sure only the start code (code 11) is shown in normal condition. <Ref. to 4-4b [T6D1].>

NOTE:
When trouble codes are stored in memory, repair the faulty parts.

4) Set the speed of all wheels at 10 km/h (6 MPH) or less.
5) Turn ignition switch OFF.
6) Start engine, and within 0.5 seconds after the ABS warning light and TCS warning light go out, press TCS OFF switch. Within 1.0 second thereafter, release and press the switch again. Then, keep the switch pressed.

NOTE:
- When the TCS sequence control is set to on, the brake pedal must not be depressed.
- Engine must operate.
- When TCS OFF switch is not depressed within 0.5 seconds after ABS and TCS warning lights turn off, the trouble code mode comes on.

7) After completion of TCS sequence control, turn ignition switch OFF.

2. OPERATIONAL GUIDELINES OF THE TCS SEQUENCE CONTROL WITH SELECT MONITOR

1) Connect select monitor to data link connector beside driver's seat heater unit. <Ref. to 4-4 [W19D0] step 1).>
2) Engine starts.
3) Put select monitor to TCS mode.
4) Put select monitor to FBI mode. Make sure code 11 is indicated.

NOTE:
When trouble codes are stored in memory, repair the faulty parts.

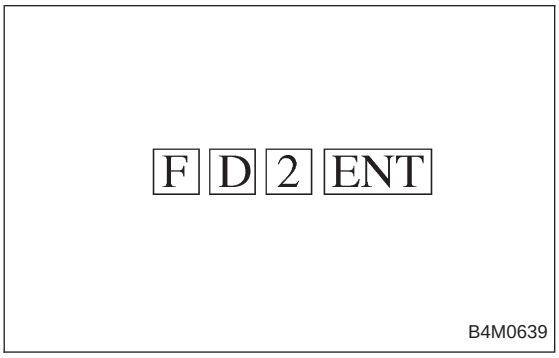

5) Press FD2 ENT key.

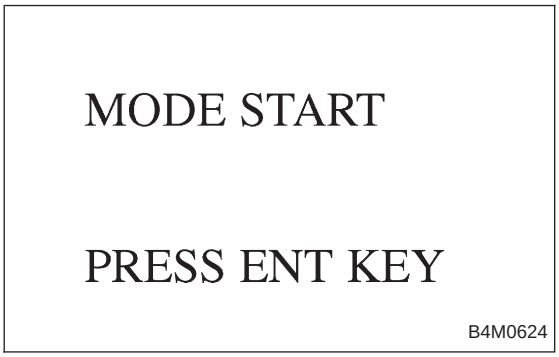

6) When the message shown in the figure is displayed, press ENT key.
7) Checked portions will be displayed on select monitor.

8) When TCS sequence control cannot be started (by system malfunction, etc.), the message shown in the figure will be displayed.

NOTE:
Read the trouble codes. Repair faulty parts.

3. CONDITIONS FOR COMPLETION OF TCS SEQUENCE CONTROL

When the following conditions develop, the TCS sequence control stops and ABS and TCS warning lights come on while the ABS and TCS function will then stop. The brake system functions as a conventional brake system.

1) When the speed of at least one wheel reaches 10 km/h (6 MPH).
2) When terminal No. 4 is separated from ground. (When select monitor is not used.)
3) When the brake pedal is depressed during sequence control and the braking lamp switch is set to ON.
4) When TCS OFF switch is released. (When select monitor is not used.)
5) After completion of the TCS sequence control.
6) When output signal to break TCS control is emitted from ECM.
7) When malfunction is detected.

NOTE:
When malfunction has been detected and the TCS sequence control operation has stopped, the trouble codes are stored in memory.

4. CONDITIONS FOR TCS SEQUENCE CONTROL

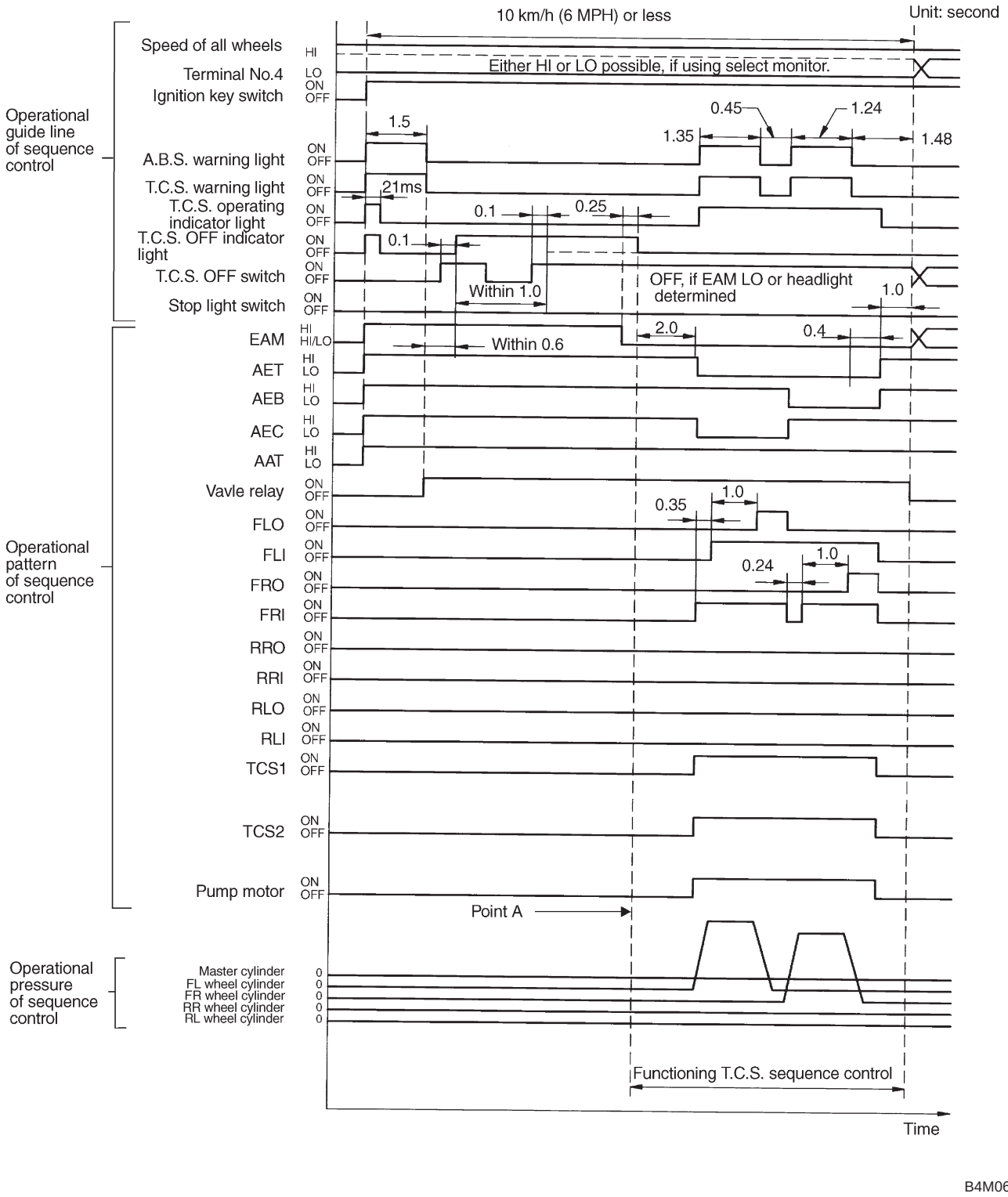

NOTE:
When select monitor is used, control operation starts at point A. It is not required to operate TCS OFF switch for starting control operation. The patterns from IGN key ON to point A show operation is started by diagnosis connector.

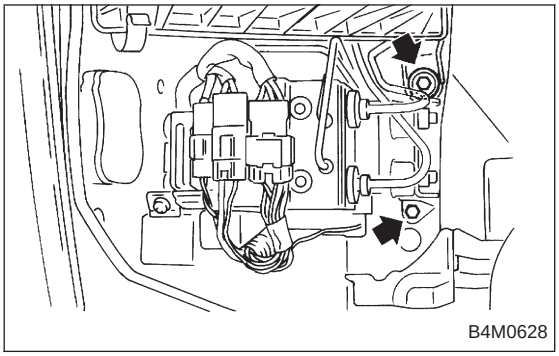

G: INSTALLATION

1) Install hydraulic unit and bracket.

Tightening torque:
32±7 N·m (3.3±0.7 kg-m, 23.9±5.1 ft-lb)

2) Connect brake pipes to their correct hydraulic unit connections. <Ref. to 4-4 [W18A3].>
3) Connect connector to hydraulic unit.
4) Install canister.
5) Install air cleaner case.
6) Install air intake duct.
7) Connect ground cable to battery.

CAUTION:
Cover relay securely with rubber boot.

21. ABS/TCS Control Module

A: REMOVAL

1) Disconnect ground cable from battery.
2) Remove floor mat located under lower right side of front seat.

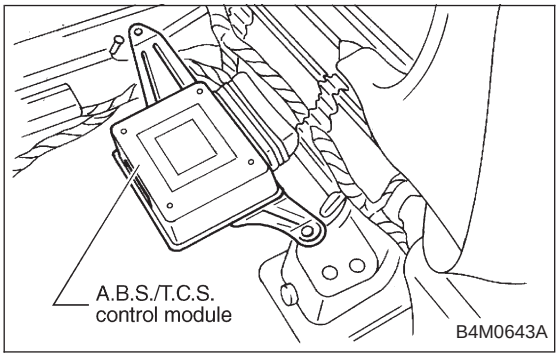

3) Remove screw which secure ABS/TCS control module from the body.
4) Disconnect connector from ABS/TCS control module.

B: INSPECTION

Check that connector is connected correctly and that connector terminal sliding resistance is correct.