4. Parking Brake (Rear Disc Brake)

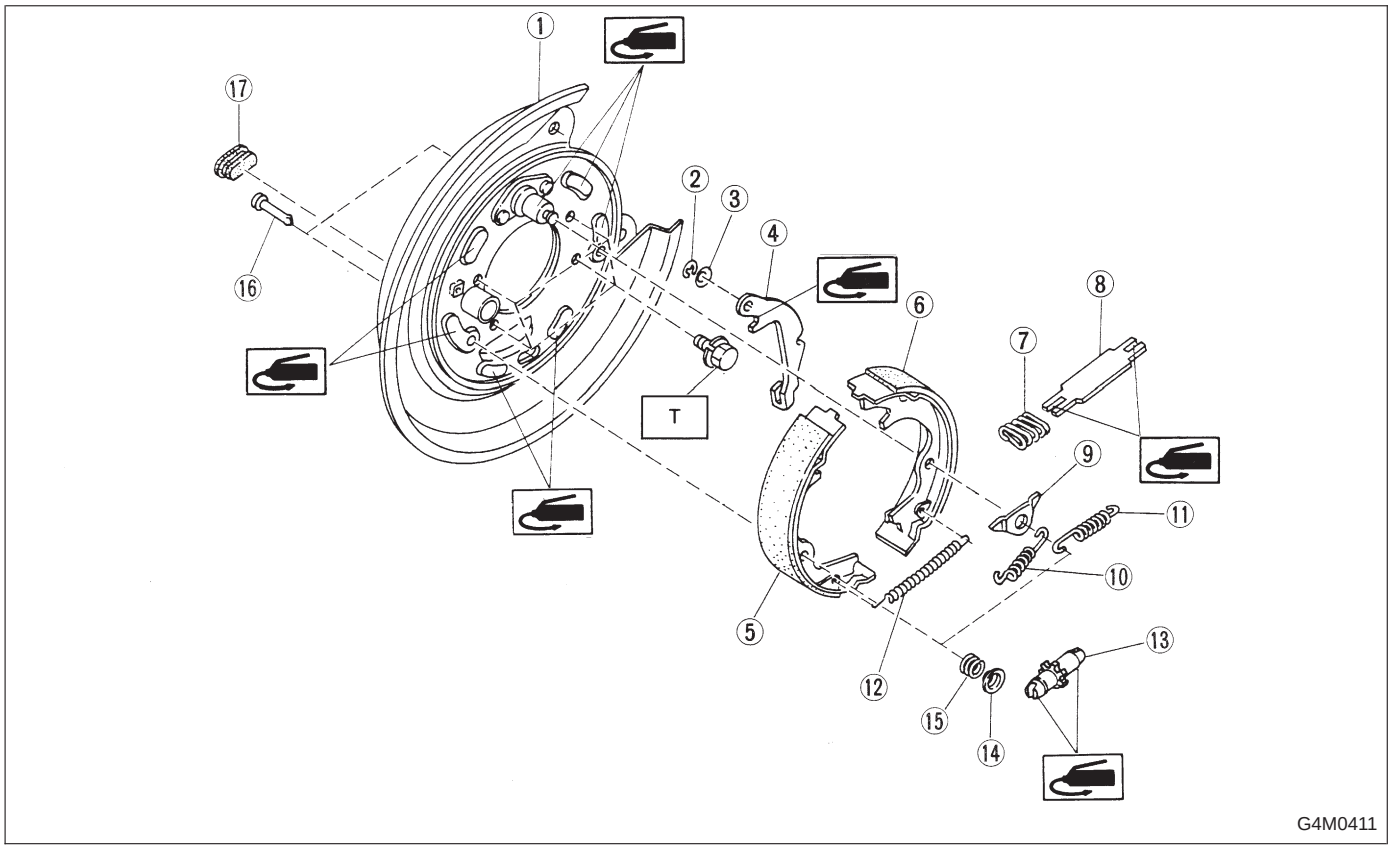

① Back plate
② Retainer
③ Spring washer
④ Lever
⑤ Parking brake shoe (Primary)
⑥ Parking brake show (Secondary)
⑦ Strut spring
⑧ Strut
⑨ Shoe guide plate
⑩ Primary return spring
⑪ Secondary return spring
⑫ Adjusting spring
⑬ Adjuster
⑭ Shoe hold-down cup
⑮ Shoe hold down spring
⑯ Shoe hold down pin
⑰ Adjusting hole cover

Tightening torque: N·m (kg-m, ft-lb)
T: 52±6 (5.3±0.6, 38.3±4.3)

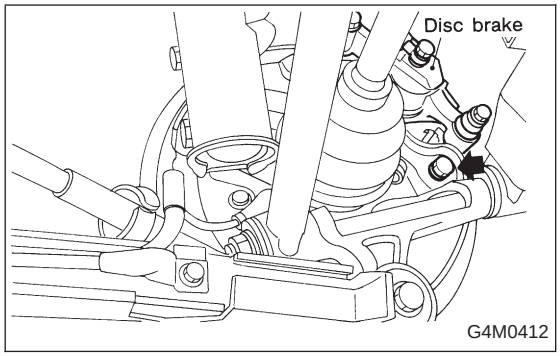

A: REMOVAL

1) Remove the two mounting bolts to the disc brake assembly and remove the disc brake assembly.
2) Suspend the disc brake assembly so that the hose is not stretched.
3) Remove the disc rotor.
4) Remove shoe return spring from parking brake assembly.
5) Remove front shoe hold down spring and pin with pliers.
6) Remove strut and strut spring.
7) Remove adjuster assembly from parking brake assembly.
8) Remove brake shoe.
9) Remove rear shoe hold-down spring and pin with pliers.

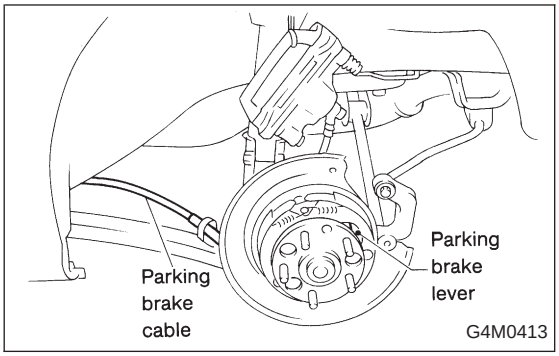

10) Remove parking cable from parking lever.
11) Using a standard screwdriver, raise retainer. Remove parking lever and washer from brake shoe.

B: INSPECTION

1) Measure brake disc inside diameter. If the disc is scored or worn, replace the brake disc.

Disc inside diameter:
Standard
170 mm (6.69 in)
Service limit
171 mm (6.73 in)

2) Measure the lining thickness. If it exceeds the limit, replace shoe assembly.

Lining thickness:
Standard
3.2 mm (0.126 in)
Service limit
1.5 mm (0.059 in)

CAUTION:

Replace the brake shoes on the right and left brake assembly at the same time.

C: INSTALLATION

CAUTION:

Be sure lining surface is free from oil contamination.

Brake grease:
Dow Corning Molykote No. 7439 (Part No. 725191460)

1) Apply brake grease to the following places.
- Six contact surfaces of shoe rim and back plate packing
- Contact surface of shoe wave and anchor pin
- Contact surface of lever and strut
- Contact surface of shoe wave and adjuster assembly
- Contact surface of shoe wave and strut
- Contact surface of lever and shoe wave

2) Installation is in reverse order of removal.

CAUTION:
- **Use new retainers and clinch them when installing brake shoes to levers.**
- **Ensure that parking lever moves smoothly.**
- **Do not confuse left parking lever with right one.**
- **Do not confuse left strut with right one.**

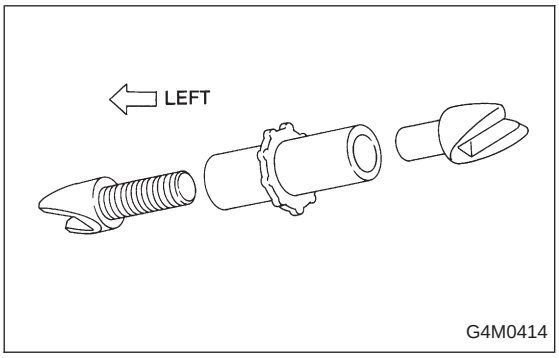

NOTE:
Ensure that adjuster assembly is securely installed with screw in the left side, facing vehicle front.

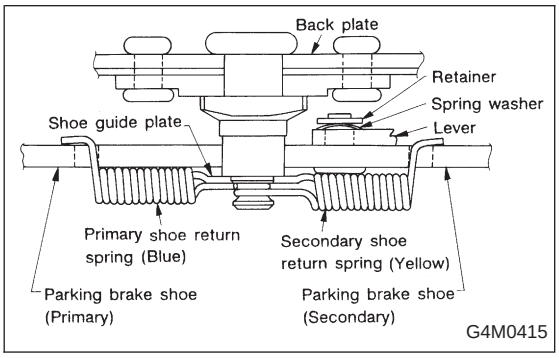

NOTE:
Ensure that shoe return spring is installed as shown in Figure.

3) Adjust parking brakes. <Ref. to 4-4 [W4D1].>

CAUTION:
After replacing parking brake lining, be sure to drive vehicle for “break-in” purposes.
(1) Drive the vehicle about 35 km/h (22 MPH).
(2) With the parking brake release button pushed in, pull the parking brake lever gently, pulling with a force of approximately 147 N (15 kg, 33 lb).
(3) Drive the vehicle for about 200 m (0.12 mile) in this condition.
(4) Wait 5 to 10 minutes for the parking brake to cool down. Repeat this procedure once more.
(5) After breaking-in, re-adjust parking brakes.

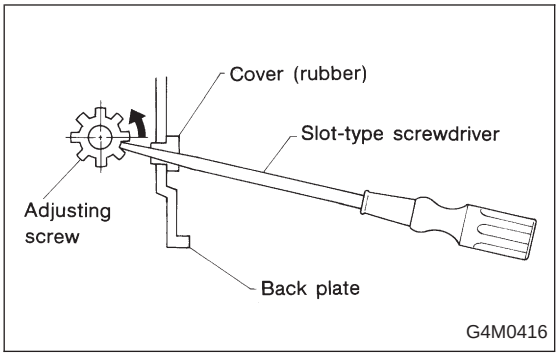

D: PARKING BRAKE ADJUSTMENT

1. SHOE CLEARANCE ADJUSTMENT

1) Remove adjusting hole cover from back plate.
2) Turn adjusting screw using a slot-type screwdriver until brake shoe is in close contact with disc rotor.
3) Turn back (downward) adjusting screw 3 or 4 notches.
4) Install adjusting hole cover to back plate.

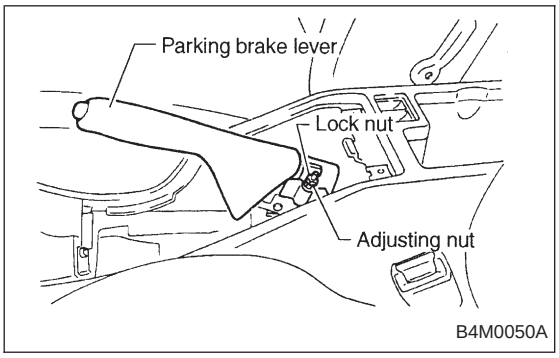

2. LEVER STROKE ADJUSTMENT

1) Remove console box lid.
2) Forcibly pull parking brake lever 3 to 5 times.
3) Adjust parking brake lever by turning adjusting nut until parking brake lever stroke is set at 6 notches with operating force of 196 N (20 kg, 44 lb).
4) Tighten lock nut.
5) Install console box lid.

Lever stroke:
7 to 8 notches when pulled with a force of 196 N (20 kg, 44 lb)

Tightening torque (Lock nut):
5.9±1.5 N·m (0.60±0.15 kg-m, 4.3±1.1 ft-lb)

5. Master Cylinder

A: REMOVAL

1) Thoroughly drain brake fluid from reservoir tank.
2) Disconnect fluid level indicator harness connector.
3) Remove brake pipes from master cylinder.
4) Remove master cylinder mounting nuts, and take out master cylinder from brake booster.

CAUTION:
Be extremely careful not to spill brake fluid. Brake fluid spilt on the vehicle body will harm the painted surface; wipe it off quickly if spilt.