2. Rear Disc Brake

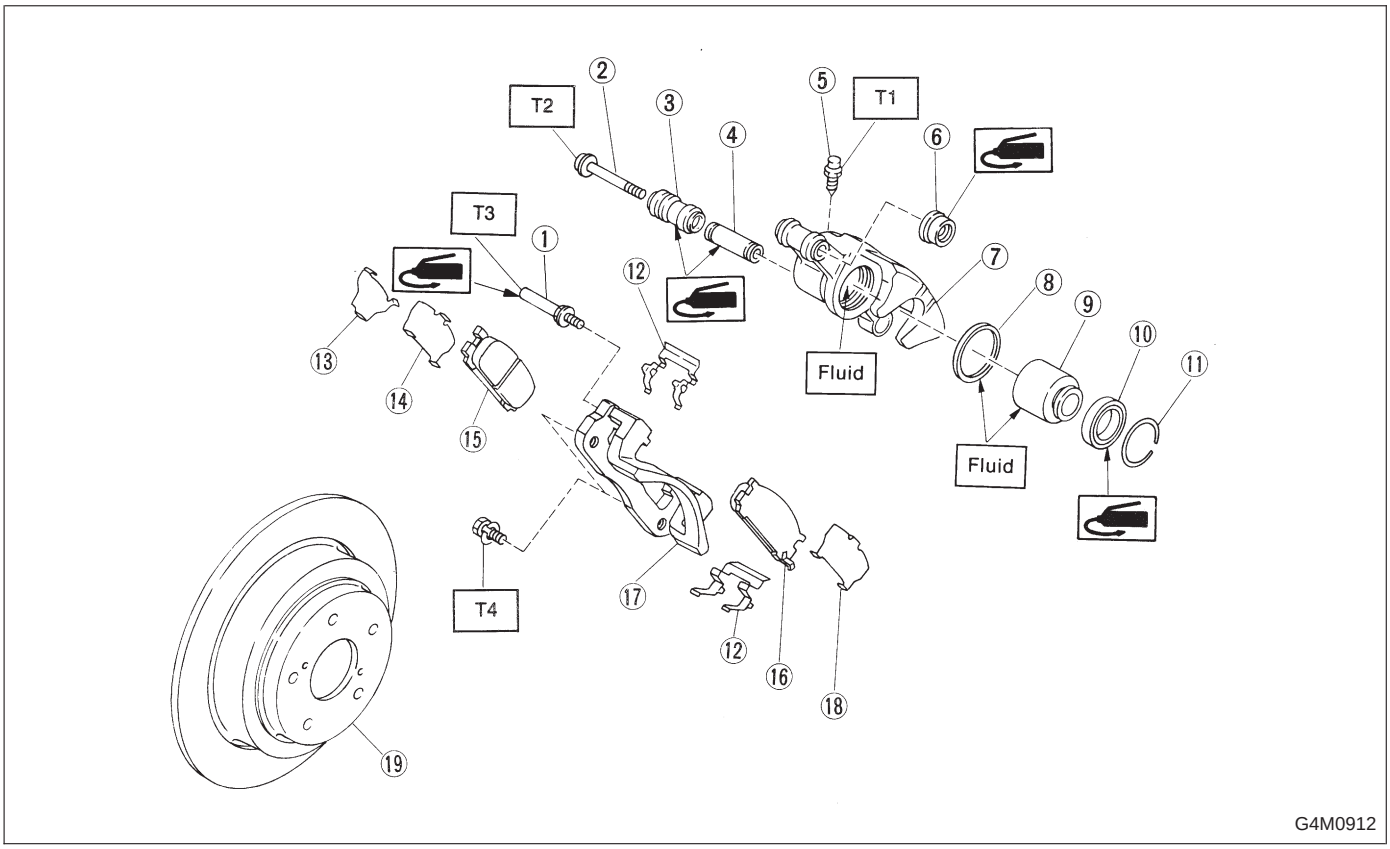

① Guide pin
② Lock pin
③ Lock pin boot
④ Lock pin sleeve
⑤ Air bleeder screw
⑥ Guide pin boot
⑦ Caliper body
⑧ Piston seal
⑨ Piston
⑩ Piston boot
⑪ Boot ring
⑫ Pad clip
⑬ Shim
⑭ Inner shim
⑮ Inner pad
⑯ Outer pad
⑰ Support
⑱ Outer shim
⑲ Disc rotor

Tightening torque: N·m (kg-m, ft-lb)
T1: 8±1 (0.8±0.1, 5.8±0.7)
T2: 20±4 (2.0±0.4, 14.5±2.9)
T3: 26±5 (2.7±0.5, 19.5±3.6)
T4: 52±6 (5.3±0.6, 38.3±4.3)

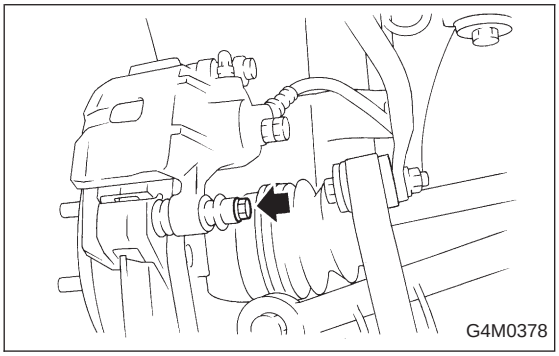

A: ON-CAR SERVICE

1. PAD

1) Remove lock pin.

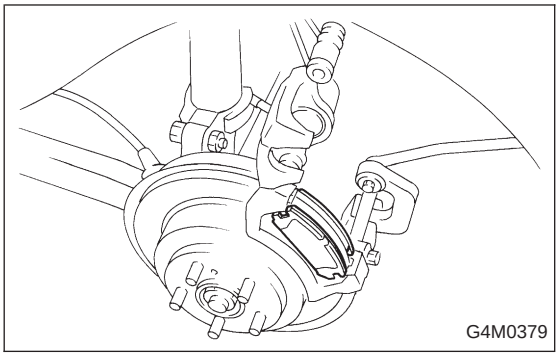

2) Raise caliper body.
3) Remove pad from support.

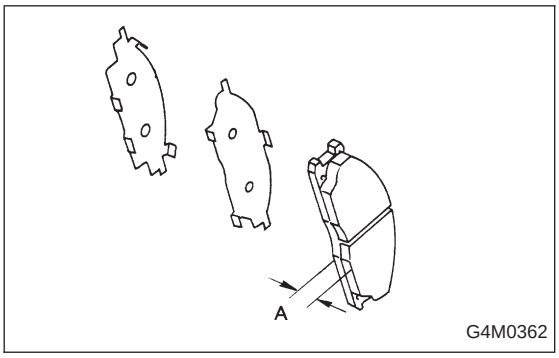

4) Check pad thickness (including back metal).

Pad thickness: A
Standard value 15.0 mm (0.591 in)
Wear limit 6.5 mm (0.256 in)

CAUTION:

- **Always replace the pads for both the left and right wheels at the same time. Also replace pad clips if they are twisted or worn.**
- **A wear indicator is provided on the inner disc brake pad. If the pad wears down to such an extent that the end of the wear indicator contacts the disc rotor, a squeaking sound is produced as the wheel rotates. If this sound is heard, replace the pad.**
- **Replace pad if there is oil or grease on it.**

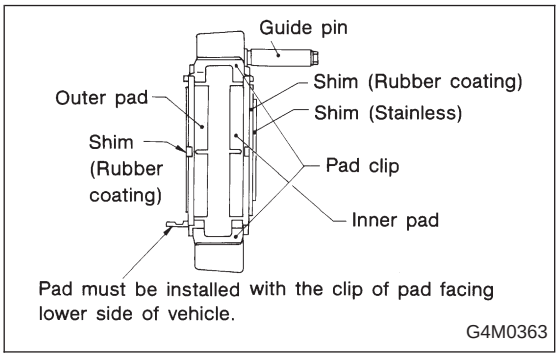

5) Apply thin coat of PBC GREASE (Part No. 03607000) to the frictional portion between pad and pad clip.
6) Install pad on support.

7) Install caliper body on support.

Tightening torque:
20±4 N·m (2.0±0.4 kg-m, 14.5±2.9 ft-lb)

NOTE:
If it is difficult to push piston during pad replacement, loosen air bleeder to facilitate work.

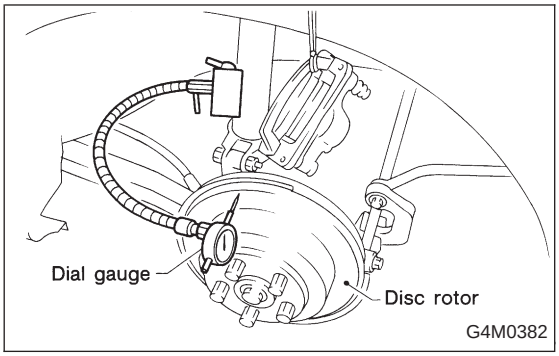

2. DISC ROTOR

1) Install disc rotor by tightening the five wheel nuts.
2) Set a dial gauge on the disc rotor. Turn disc rotor to check runout.

NOTE:
Make sure that dial gauge is set 5 mm (0.20 in) inward of rotor outer perimeter.

Disc rotor runout limit:
0.1 mm (0.004 in)

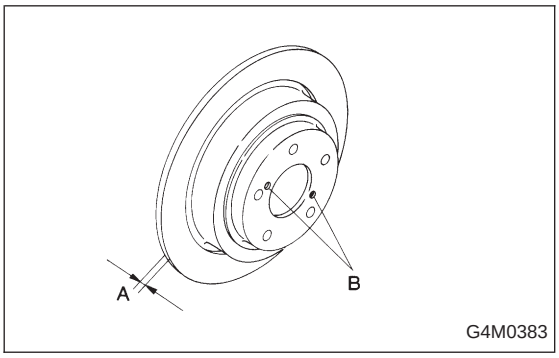

3) Measure disc rotor thickness.

NOTE:
Make sure that micrometer is set 5 mm (0.20 in) inward of rotor outer perimeter.

Disc rotor thickness: A
Standard value 10 mm (0.39 in)
Service limit 8.5 mm (0.335 in)

NOTE:
When removing disc rotor, refer to instructions under Parking Brake 4-4 [W4A0].

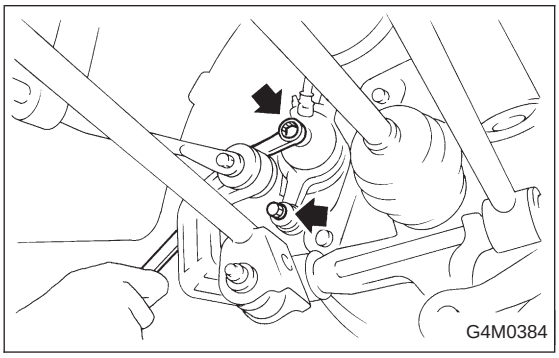

B: REMOVAL

1) Lift-up vehicle and remove wheels.
2) Disconnect brake hose from caliper body assembly.

CAUTION:
Do not allow brake fluid to come in contact with vehicle body; wipe off completely if spilled.

3) Remove lock pin.
4) Raise caliper body and move it toward vehicle center to separate it from support.
5) Remove support from back plate.

NOTE:
Remove support only when replacing it or the rotor. It need not be removed when servicing caliper body assembly.

6) Clean mud and foreign particles from caliper body assembly and support.

CAUTION:
Be careful not to allow foreign particles to enter inlet (at brake hose connector).

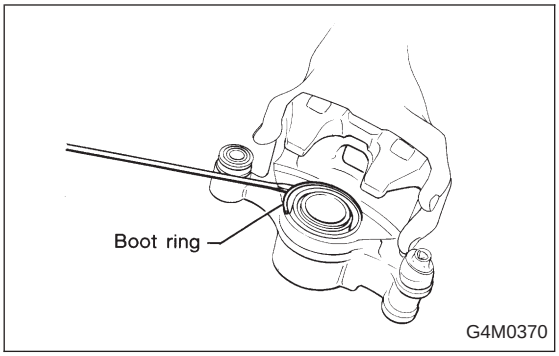

C: DISASSEMBLY

1) Remove the boot ring.

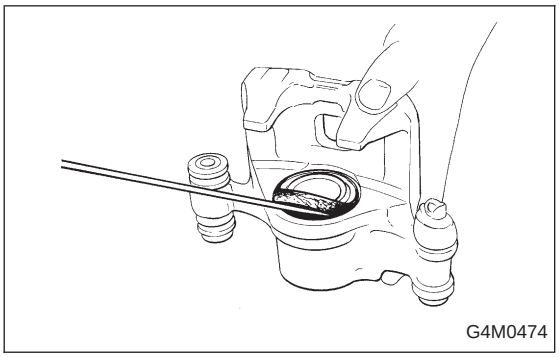

2) Remove the piston boot.

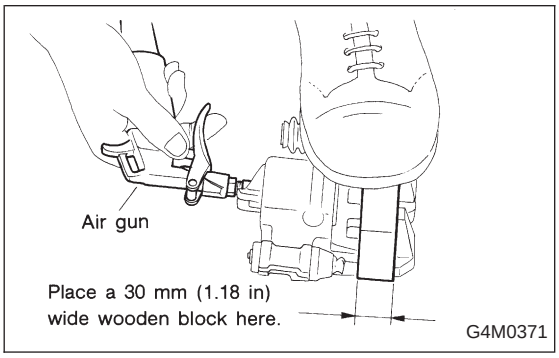

3) Gradually supply compressed air via inlet of caliper body to force piston out.

CAUTION:

- **Place a wooden block as shown in Figure to prevent damage to piston.**
- **Do not apply excessively high-pressure.**

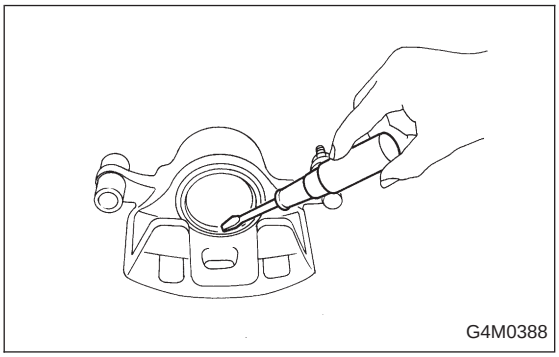

4) Remove piston seal from caliper body cylinder.
5) Remove lock pin sleeve and boot from caliper body.
6) Remove guide pin boot.

D: INSPECTION

1) Repair or replace faulty parts.
2) Check caliper body and piston for uneven wear, damage or rust.
3) Check rubber parts for damage or deterioration.

E: ASSEMBLY

1) Clean caliper body interior using brake fluid.
2) Apply a coat of brake fluid to piston seal and fit piston seal in groove on caliper body.
3) Apply a coat of brake fluid to the entire inner surface of cylinder and outer surface of piston.
4) Insert piston into cylinder.

CAUTION:
Do not force piston into cylinder.

5) Apply a coat of specified grease to boot and fit in groove on ends of cylinder and piston.

Grease:
NIGLUBE RX-2 (Part No. 003606000)

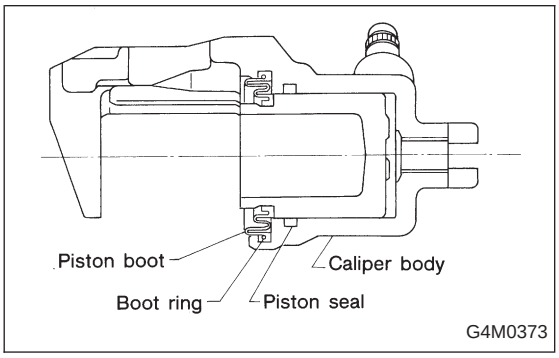

6) Install the piston boot to the caliper body, and attach boot ring.

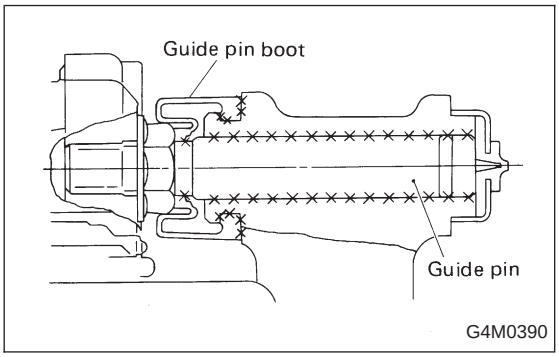

7) Apply a coat of specified grease to guide pin, outer surface, sleeve outer surface, cylinder inner surface, and boot grooves.

Grease:
NIGLUBE RX-2 (Part No. 003606000)

8) Install guide pin boot on caliper body.
9) Install lock pin boot on caliper body and insert lock pin sleeve into place.

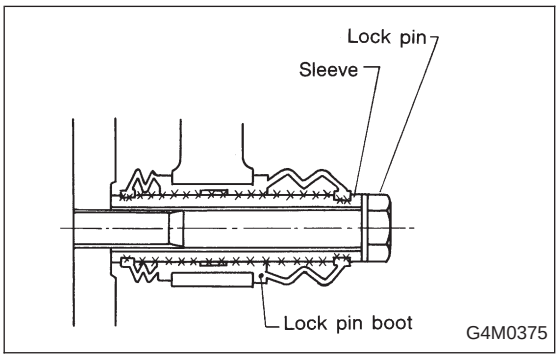

F: INSTALLATION

1) Install disc rotor on hub.
2) Install support on back plate.

Tightening torque:
52±6 N·m (5.3±0.6 kg-m, 38.3±4.3 ft-lb)

CAUTION:
- **Always replace the pads for both the left and right wheels at the same time. Also replace pad clips if they are twisted or worn.**
- **A wear indicator is provided on the inner disc brake pad. If the pad wears down to such an extent that the end of the wear indicator contacts the disc rotor, a squeaking sound is produced as the wheel rotates. If this sound is heard, replace the pad.**
- **Replace pads if there is oil or grease on them.**

3) Apply thin coat of PBC GREASE (Part No. 003607000) to the frictional portion between pad and pad clip.

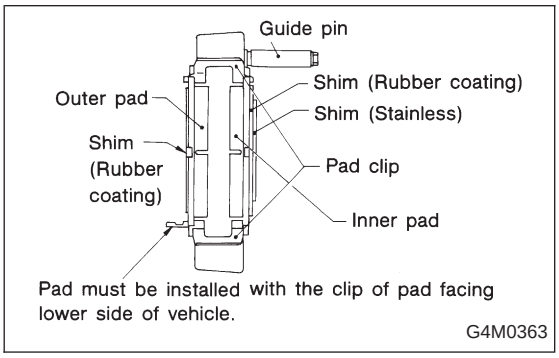

4) Install pads on support.

5) Install caliper body on support.

Tightening torque:
20±4 N·m (2.0±0.4 kg-m, 14.5±2.9 ft-lb)

6) Connect brake hose.

Tightening torque:
18±3 N·m (1.8±0.3 kg-m, 13.0±2.2 ft-lb)

CAUTION:
- **The brake hose must be connected without any twist.**
- **Replace brake hose gaskets with new ones.**

7) Bleed air from brake system.