3. Power Steering Oil Pump

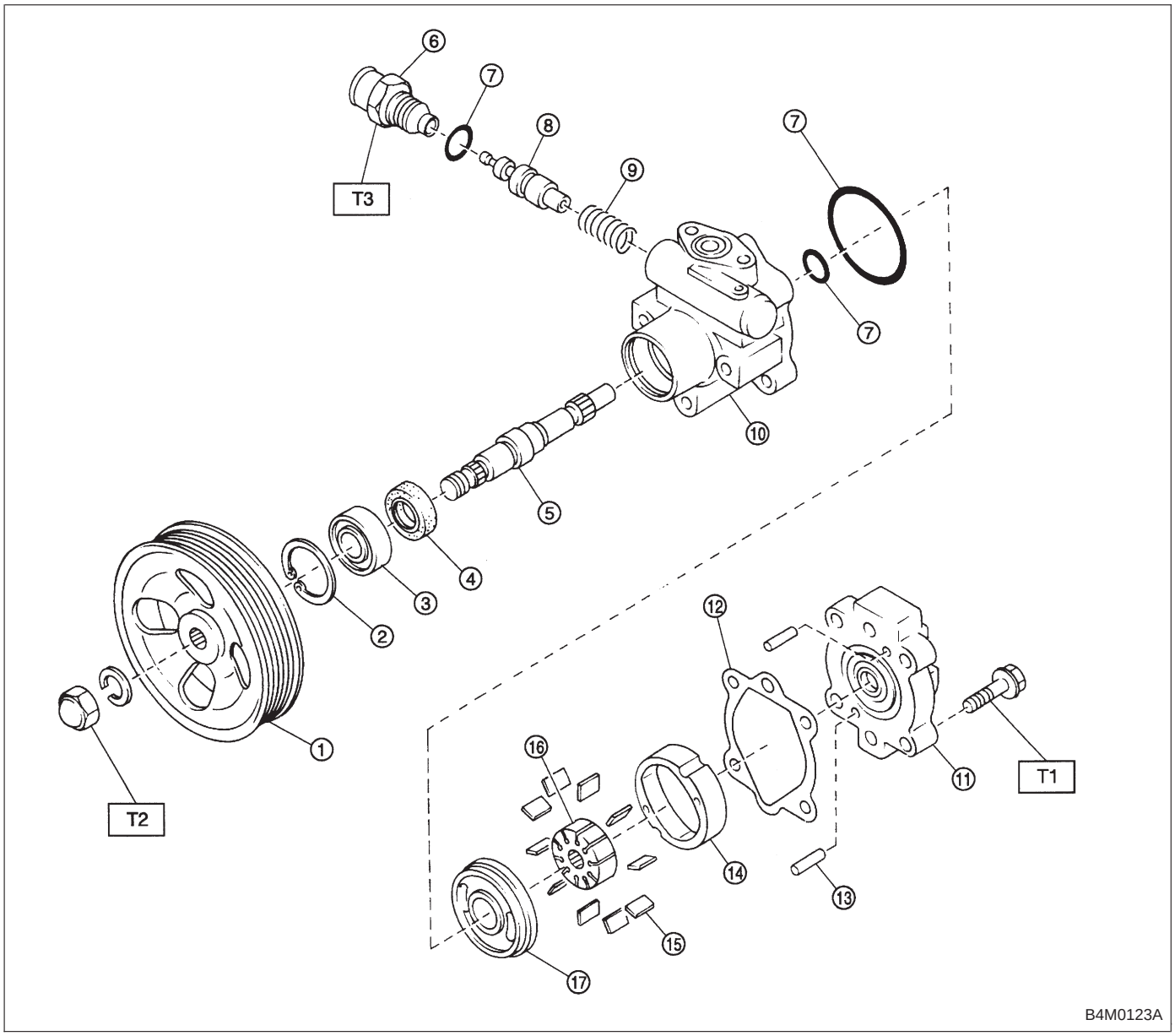

① Pulley
② Snap ring
③ Bearing
④ Oil seal
⑤ Shaft
⑥ Connector
⑦ O-ring
⑧ Spool valve
⑨ Spring
⑩ Front casing
⑪ Rear cover
⑫ Gasket
⑬ Knock pin
⑭ Cam ring
⑮ Vane
⑯ Rotor
⑰ Side plate

Tightening torque: N·m (kg-m, ft-lb)
T1: 16±2 (1.6±0.2, 11.6±1.4)
T2: 61±7 (6.2±0.7, 44.8±5.1)
T3: 74±5 (7.5±0.5, 54.2±3.6)