1. Steering Wheel and Column (Tilt)

1. WITH AIRBAG MODEL

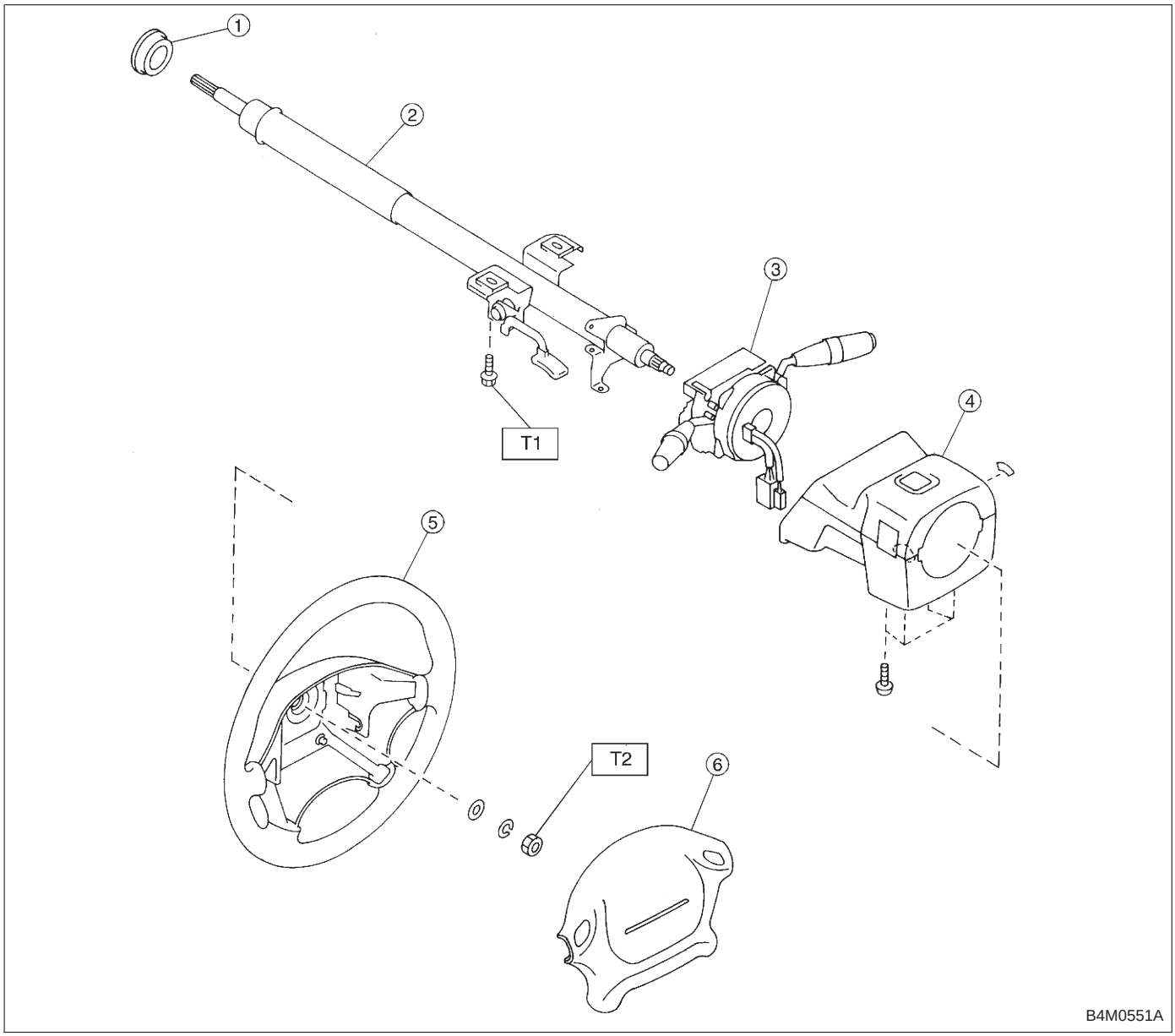

1. Bushing
2. Column shaft
3. Steering roll connector
4. Column cover
5. Steering wheel
6. Airbag module

Tightening torque: N·m (kg-m, ft-lb)
T1: 25±5 (2.5±0.5, 18.1±3.6)
T2: 34±5 (3.5±0.5, 25.3±3.6)