1. Power Steering

1. STEERING CONDITION

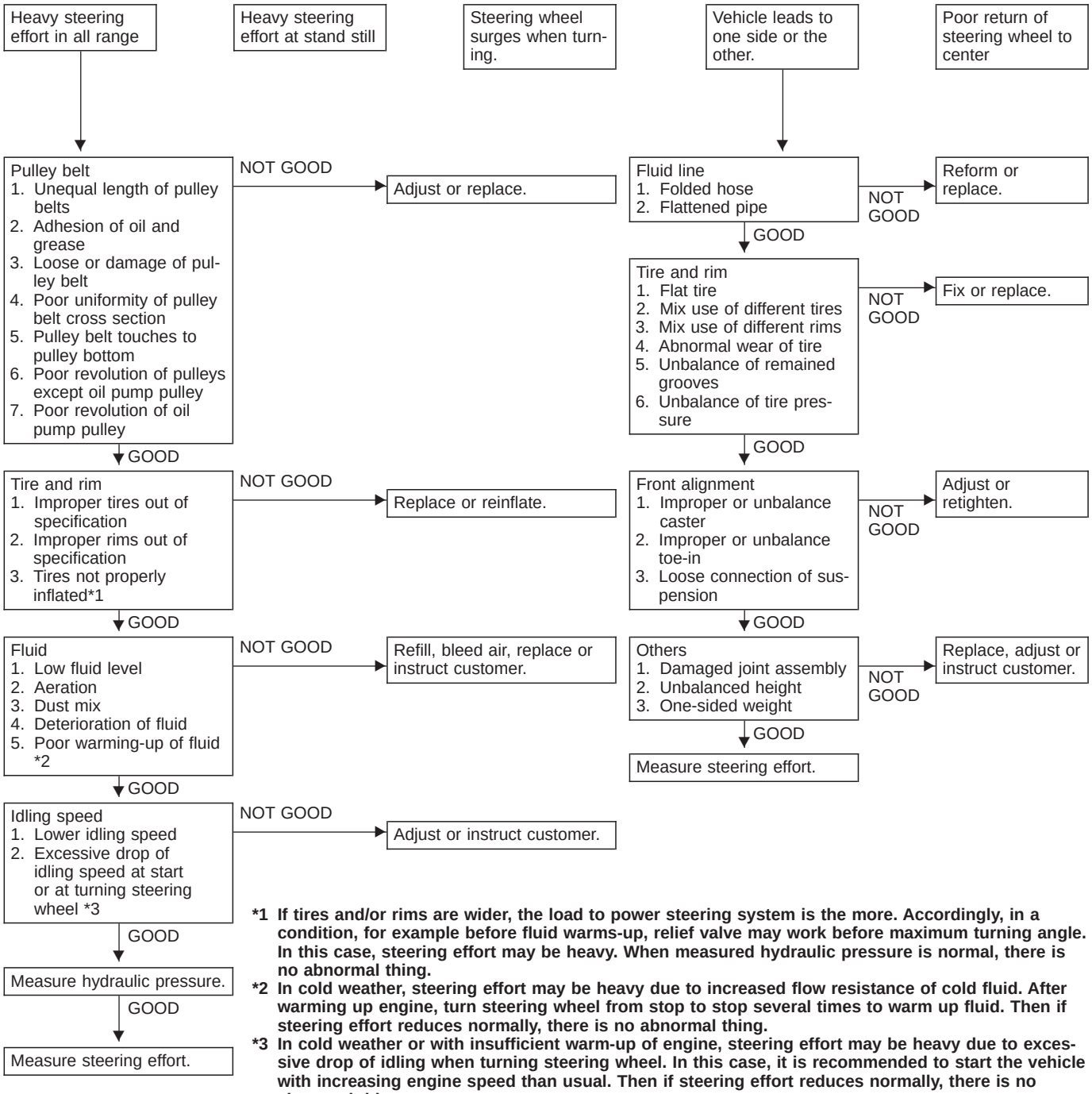

***1 If tires and/or rims are wider, the load to power steering system is the more. Accordingly, in a condition, for example before fluid warms-up, relief valve may work before maximum turning angle. In this case, steering effort may be heavy. When measured hydraulic pressure is normal, there is no abnormal thing.**

***2 In cold weather, steering effort may be heavy due to increased flow resistance of cold fluid. After warming up engine, turn steering wheel from stop to stop several times to warm up fluid. Then if steering effort reduces normally, there is no abnormal thing.**

***3 In cold weather or with insufficient warm-up of engine, steering effort may be heavy due to excessive drop of idling when turning steering wheel. In this case, it is recommended to start the vehicle with increasing engine speed than usual. Then if steering effort reduces normally, there is no abnormal thing.**

2. MEASUREMENT OF HYDRAULIC PRESSURE

CAUTION:
Be sure to complete all items aforementioned in "STEERING CONDITION" 4-3 [K101], prior to measuring hydraulic pressure. Otherwise, pressure can not be measured correctly.

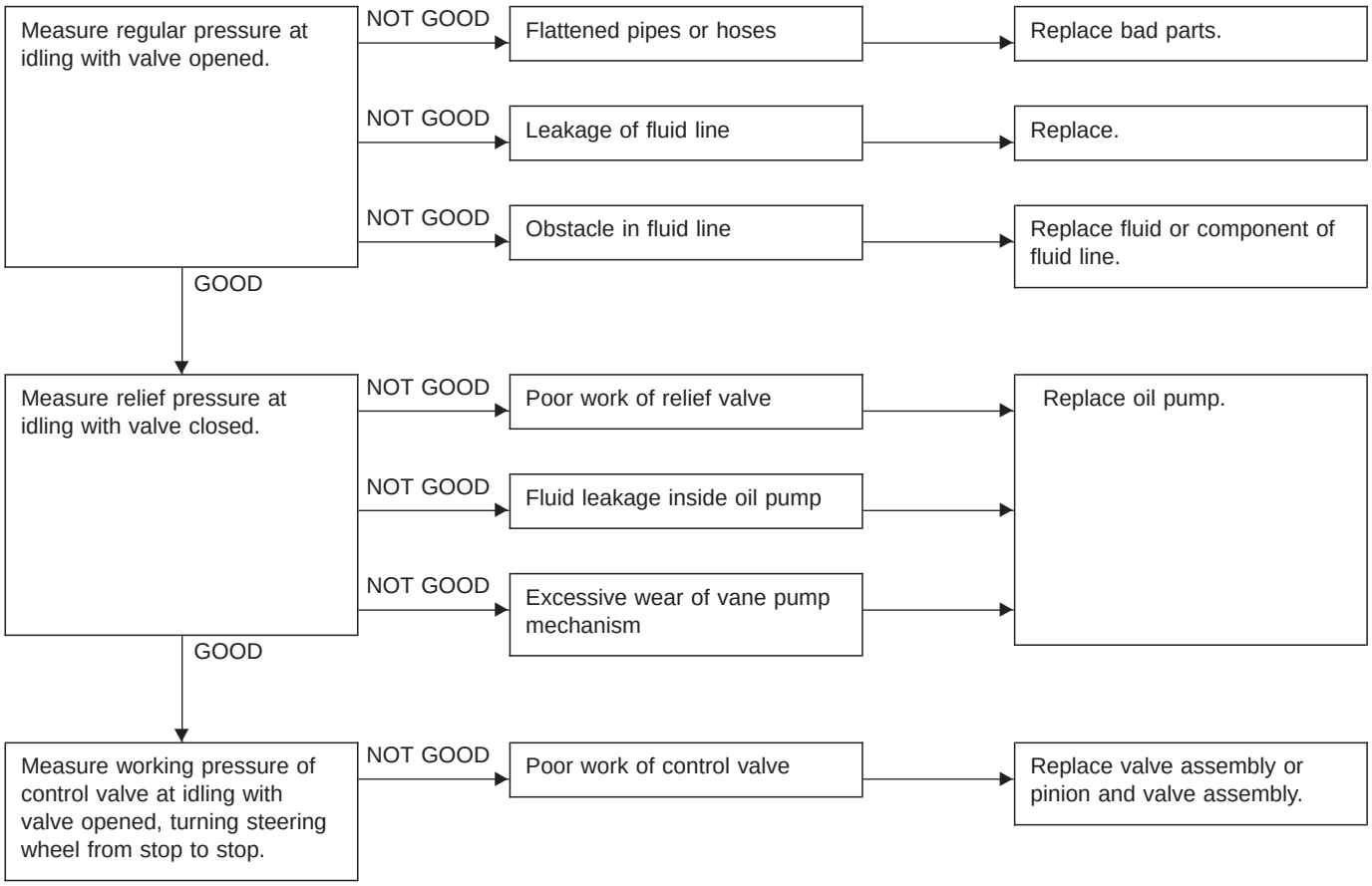

CAUTION:
- **Do not leave the valve of pressure gauge closed or hold the steering wheel at stop end for 5 seconds or more in any case, as the oil pump may be damaged due to long keep of these conditions.**
- **Put cotton cloth waste at a place where fluid drops before pressure gauge is installed. Wipe off split fluid thoroughly after the measurement.**

NOTE:
Keep engine idling during the measurement.

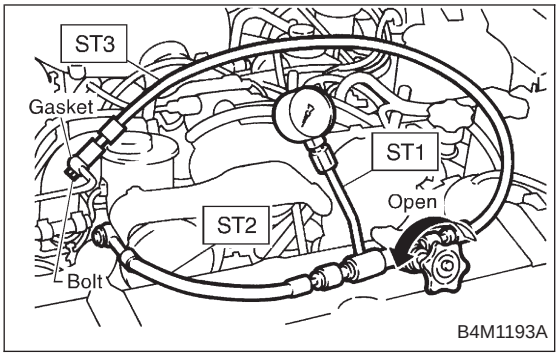

1) Install STs to power steering pump.
   (1) Drain the power steering fluid about 0.35 ℓ (0.4 US qt, 0.3 Imp qt) from oil tank.
   (2) Remove two bolts securing power steering pipes to engine.
   (3) Install ST1, 2 and 3 between power steering pump and pipes using gasket (Part No. 34621AC020) and bolt (Part No. 34620AC010).

ST1	925711000	PRESSURE GAUGE
ST2	34099AC020	ADAPTER B
ST3	34099AC010	ADAPTER A

   (4) Replenish power steering fluid up to specified level.

2) Using STs, measure regulator pressure.

Regulator pressure:
981 kPa (10 kg/cm^2, 142 psi) or less

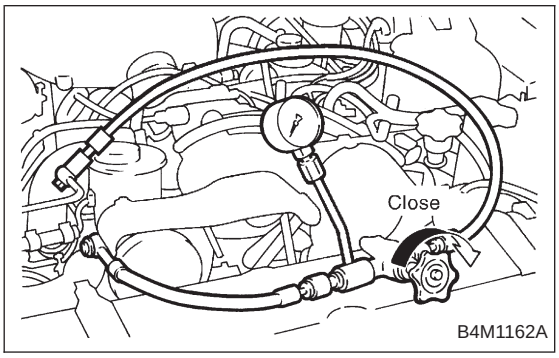

3) Using STs, measure relief pressure.

Relief pressure:
7,159 — 7,748 kPa
(73 — 79 kg/cm^2, 1,038 — 1,123 psi)

3. MEASUREMENT OF STEERING EFFORT

*4

Measure steering efforts in stand still with engine idling on concrete road.
Result: 29.4 N (3.0 kg, 6.6 lb) or less in both directions

NOT GOOD → Adjust backlash.

GOOD ↓

Measure steering efforts in stand still with engine stalled on concrete road.
Result: 294.2 N (30.0 kg, 66.2 lb) or less in both directions

NOT GOOD → Adjust backlash.

GOOD ↓

Remove universal joint.

Measure steering wheel effort.
Result: Maximum force is 2.26 N (0.23 kg, 0.51 lb) or less in both directions.
Fluctuation width is 1.08 N (0.11 kg, 0.24 lb) or less.

NOT GOOD → Check, readjust, replace if necessary.

GOOD ↓

Measure folding torque of the joint.
Result: 5.49 N (0.56 kg, 1.23 lb) or less for long yoke
8.43 N (0.86 kg, 1.90 lb) or less for short yoke

NOT GOOD → Replace with a new one.

GOOD ↓

Check front wheels for unsteady revolution or rattling and brake for dragging.

NOT GOOD → Inspect, readjust, replace if necessary.

GOOD ↓

Remove tie-rod ends.

↓

(To be continued.)

***4 When turning steering more quickly than necessary from a direction to the other direction at an engine speed over 2,000 rpm, steering effort may be heavy. This is caused by flow characteristic of oil pump and is not a problem.**

Check tie-rod ends, tie-rods and ball joints of suspension for unsteady revolution or rattling.

NOT GOOD → Inspect, replace if necessary.

GOOD ↓

Measure rotating and sliding resistance of gearbox.
Result: Rotating resistance is 11.18 N (1.14 kg, 2.51 lb) or less around center position and 15.79 N (1.61 kg, 3.55 lb) or less in all positions within 20% difference between clockwise and counterclockwise.
Sliding resistance is 304 N (31 kg, 68 lb) or less with 20% difference between left and right directions.

NOT GOOD → Readjust backlash, if ineffective replace bad parts.

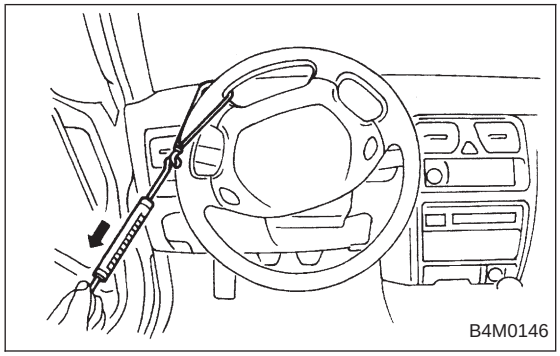

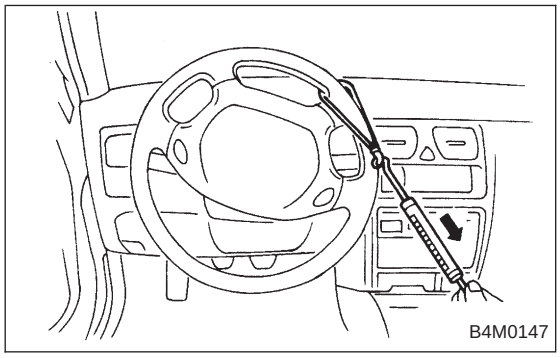

● Measurement of steering effort is as shown in the figures.

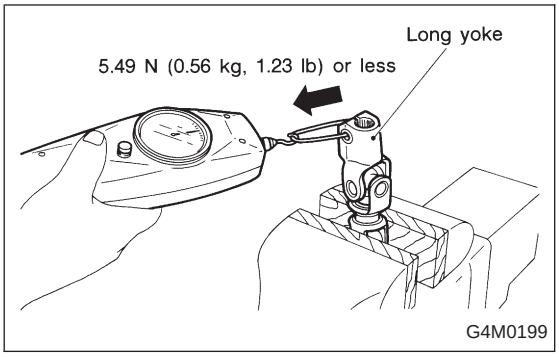

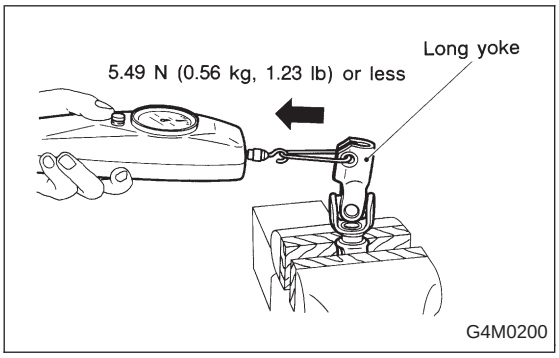

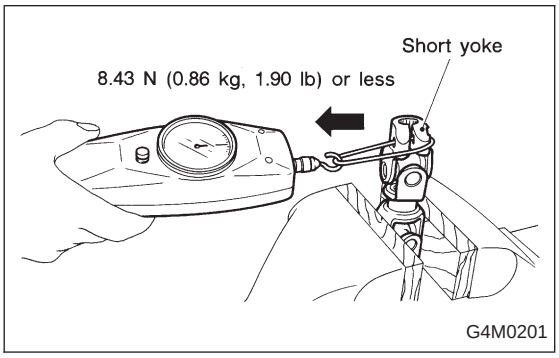

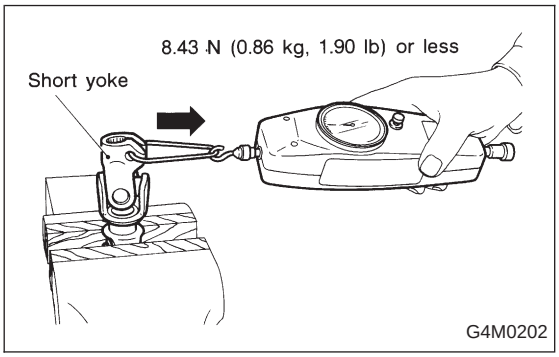

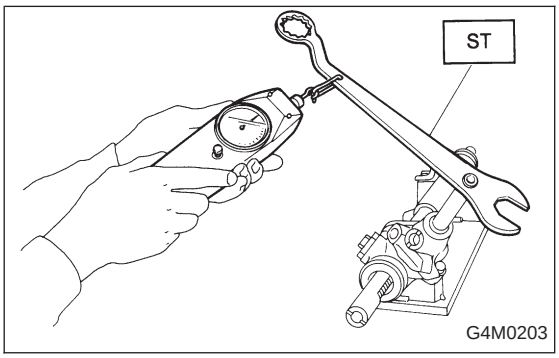

● Measurement of folding torque of universal joint is as shown in the figures.

NOTE:
Using ST, measure resistances of gearbox.

ST 926230000 SPANNER

Rotating resistance:

Straight-ahead position within 30 mm (1.18 in) from rack center

Less than 11.18 N (1.14 kg, 2.51 lb)

Maximum allowable torque

15.7 N (1.6 kg, 3.5 lb)

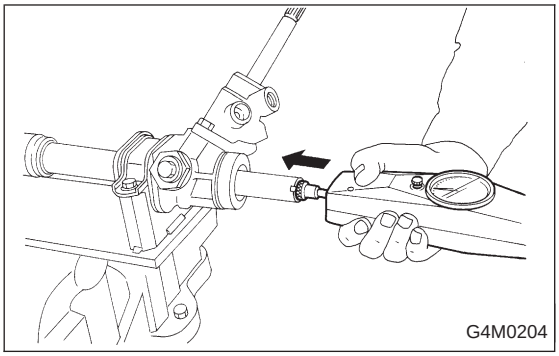

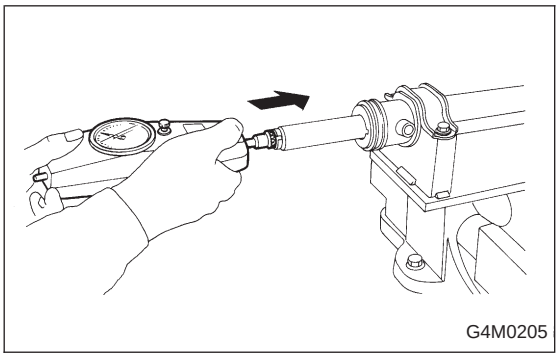

Sliding resistance:
Right-turn steering
304 N (31 kg, 68 lb) or less
Left-turn steering
304 N (31 kg, 68 lb) or less

4. FLUID LEAKAGE (LHD MODEL)

CAUTION:
It is likely that although one judges fluid leakage, there is actually no leakage. This is because the fluid spilt during the last maintenance was not completely wiped off. Be sure to wipe off spilt fluid thoroughly after maintenance.

Leakage from connecting portions of pipes and hoses, numbered with ① thru ⑨ in figure	Insufficient tightening of flare nut, catching dirt or the like, damage to flare or flare nut	Loosen and retighten, if ineffective, replace.
	Poor insertion of hose, poor clamping	Retighten or replace clamp.
	Damaged O-ring	Replace O-ring pipe or hose with new one, if ineffective, replace gearbox also.
Leakage from hose ⑩ and ⑪ in figure	Crack or damage in hose	Replace with a new one.
	Crack or damage in hose hardware	
Leakage from surrounding of cast iron portion of oil pump ⑫ and ⑬ in figure	Damaged oil seal	Replace oil seal.
	Damaged oil seal	
Leakage from oil tank, ⑭ and ⑮ in figure	Crack in oil tank, ⑭	Replace oil tank.
	Damaged O-ring, ⑮	Replace O-ring.
Leakage from filler neck ⑯	Damaged cap packing	Replace cap.
	Crack in root of filler neck	Replace oil tank.
	High fluid level *5	Adjust fluid level.
Leakage from surrounding of power cylinder of gearbox, ⑰ in figure	Damaged oil seal	Replace bad parts.
Leakage from control valve of gearbox, ⑱ and ⑲ in figure	Damaged packing or oil seal	
	Damage in control valve	

***5 Fluid level is specified at optimum position (range) for ordinary use. Accordingly, if the vehicle is used often under hard conditions such as on very rough roads or in mountainous areas, fluid may bleed out from cap air vent hole. This is not a problem. If a customer complains strongly and is not likely to be satisfied with the leakage, lower the fluid level to the extent that fluid will not bleed out under the conditions described, and have the customer check the fluid level and its quality more frequency than usual.**

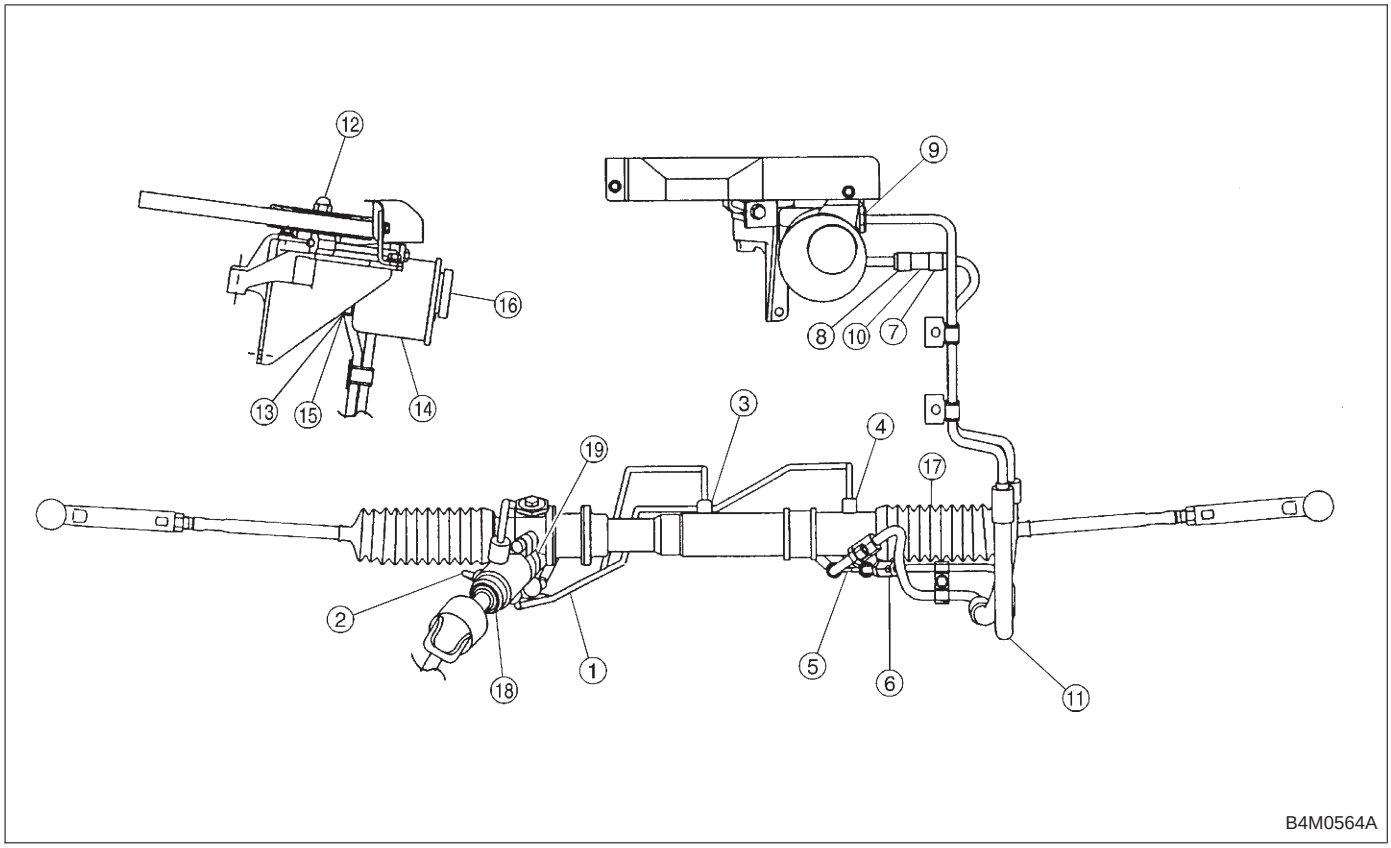
12
9
16
8
10
7
13
15
14
3
4
19
17
2
18
1
5
6
11
B4M0564A

5. FLUID LEAKAGE (RHD MODEL)

CAUTION:
It is likely that although one judges fluid leakage, there is actually no leakage. This is because the fluid spilt during the last maintenance was not completely wiped off. Be sure to wipe off spilt fluid thoroughly after maintenance.

Leakage from connecting portions of pipes and hoses, numbered with ① thru ⑨ in figure	Insufficient tightening of flare nut, catching dirt or the like, damage to flare or flare nut	Loosen and retighten, if ineffective, replace.
	Poor insertion of hose, poor clamping	Retighten or replace clamp.
	Damaged O-ring	Replace O-ring pipe or hose with new one, if ineffective, replace gearbox also.
Leakage from hose ⑩ and ⑪ in figure	Crack or damage in hose	Replace with a new one.
	Crack or damage in hose hardware	
Leakage from surrounding of cast iron portion of oil pump ⑫ and ⑬ in figure	Damaged oil seal	Replace oil seal.
	Damaged oil seal	
Leakage from oil tank, ⑭ and ⑮ in figure	Crack in oil tank, ⑭	Replace oil tank.
	Damaged O-ring, ⑮	Replace O-ring.
Leakage from filler neck ⑯	Damaged cap packing	Replace cap.
	Crack in root of filler neck	Replace oil tank.
	High fluid level *5	Adjust fluid level.
Leakage from surrounding of power cylinder of gearbox, ⑰ in figure	Damaged oil seal	Replace bad parts.
Leakage from control valve of gearbox, ⑱ and ⑲ in figure	Damaged packing or oil seal	
	Damage in control valve	

***5 Fluid level is specified at optimum position (range) for ordinary use. Accordingly, if the vehicle is used often under hard conditions such as on very rough roads or in mountainous areas, fluid may bleed out from cap air vent hole. This is not a problem. If a customer complains strongly and is not likely to be satisfied with the leakage, lower the fluid level to the extent that fluid will not bleed out under the conditions described, and have the customer check the fluid level and its quality more frequency than usual.**

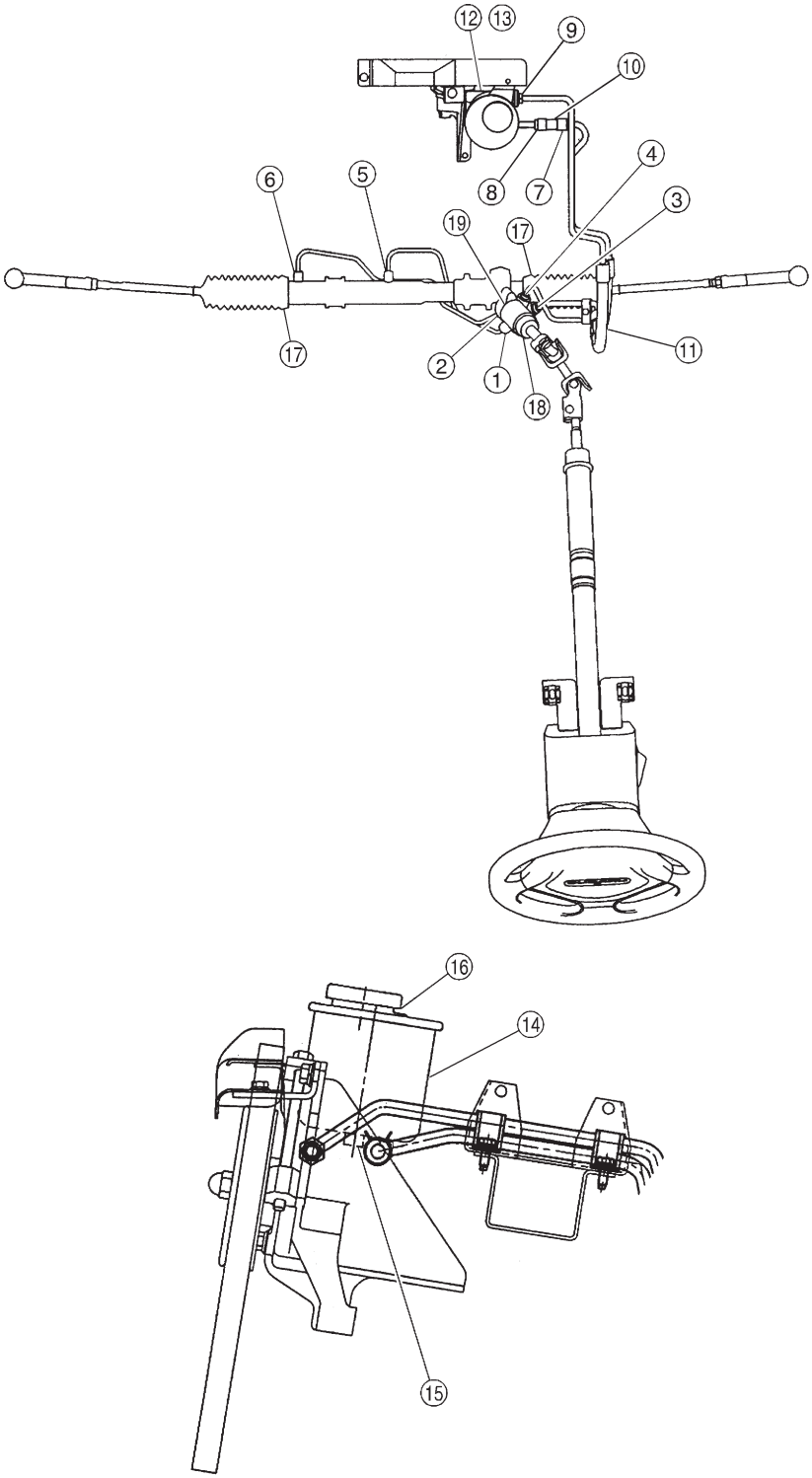

B4M0675A

6. NOISE AND VIBRATION

Hiss noise (continuous) While engine is running with maximum turning angle.	Relief valve sound *6	Generates at max. turning angle.	Normal (Don't keep this condition over 5 seconds.)
		Generates without steering operation.	Defective Replace oil pump.
Rattling noise (intermittent) While engine is running.	Interference with adjacent parts		Check clearance. [Refer to next article 6.] Correct if necessary.
	Loosened installation of oil pump, oil tank, pump bracket, gearbox or crossmember.		Retighten.
	Loosened installation of oil pump pulley or other pulley(s).		Retighten.
	Loosened linkage or play of steering or suspension. Loosened tightening of joint or steering column.		Retighten or replace.
	Sound generates from the inside of gearbox or oil pump.		Replace the gearbox or oil pump.
Knocking When turning steering wheel in both direction with small angle repeatedly at engine ON or OFF.	Excessive backlash Loosened lock nut for adjusting backlash.		Adjust and retighten.
	Loosened tightening or play of tie-rod, tie-rod end.		Retighten or replace.

***6 Don't keep the relief valve operated over 5 sec. at any time or inner parts of the oil pump may be damaged due to rapid increase of fluid temperature.**

DIAGNOSTICS

Grinding noise (continuous) While engine is running.	Vane pump aeration *7	Inspect and retighten fluid line connection. Refill fluid and vent air.
	Vane pump seizing	Replace oil pump.
	Pulley bearing seizing of oil pump	
	Folded hose, flat pipe	Replace.
Squeal, squeak (intermittent or continuous) While engine is running.	Maladjustment of pulley belt Damaged or charged pulley belt Unequal length of pulley belts	Adjust or replace. (Replace two belts as a set.)
	Run out or soilage of V-groove surface of oil pump pulley	Clean or replace.
Sizzling noise (continuous) While engine is running.	Fluid aeration	Fix wrong part causing aeration. Replace fluid and vent air.
	Damaged pipe of gearbox	Replace pipe.
	Abnormal inside of hose or pipe Flat hose or pipe	Rectify or replace.
	Abnormal inside of oil tank	Replace.
	Removed oil tank cap	Install cap.
Whistle (continuous) While engine is running.	Abnormal pipe of gearbox or abnormal inside of hose	Replace bad parts of gearbox or hose.

***7 Grinding noise may be heard immediately after the engine start in extremely cold condition. In this case, if the noise goes off during warm-up there is no abnormal function in the system. This is due to the fluid characteristic in extremely cold condition.**

Whine or growl (continuous or intermittent) While engine is running with/ without steering turned.	Loosened installation of oil pump, oil pump bracket	Retighten.
	*8 Abnormal inside of oil pump, hose	Replace oil pump, hose, if the noise can be heard when running as well as stand still.
	Torque converter growl air conditioner compression growl	Remove power steering pulley belt and confirm.
Creaking noise (intermittent) While engine is running with steering turned.	Abnormal inside of gearbox	Replace bad parts of gearbox.
	Abnormal bearing for steering shaft	Apply grease or replace.
	*9 Generates when turning steering wheel with brake (service or parking) applied.	If the noise goes off when brake is released, it is normal.
*10 Vibration While engine is running with/ without steering turned.	Too low engine speed at start	Adjust and instruct customers.
	Vane pump aeration	Fix wrong part. Vent air.
	Damaged valve in oil pump, gearbox	Replace oil pump, bad parts of gearbox.
	Looseness of play of steering, suspension parts	Retighten.

***8 Oil pump makes whine or growl noise slightly due to its mechanism. Even if the noise can be heard when steering wheel is turned at stand still there is no abnormal function in the system provided that the noise eliminates when the vehicle is running.**

***9 When stopping with service brake and/or parking brake applied, power steering can be operated easily due to its light steering effort. If doing so, the disk rotates slightly and makes creaking noise. The noise is generated by creaking between the disk and pads. If the noise goes off when the brake is released, there is no abnormal function in the system.**

***10 There may be a little vibration around the steering devices when turning steering wheel at standstill, even though the component parts are properly adjusted and have no defects.**
Hydraulic systems are likely to generate this kind of vibration as well as working noise and fluid noise because of combined conditions, i.e., road surface and tire surface, engine speed and turning speed of steering wheel, fluid temperature and braking condition.
This phenomena does not indicate there is some abnormal function in the system.
The vibration can be known when steering wheel is turned repeatedly at various speeds from slow to rapid step by step with parking brake applied on concrete road and in “D” range for automatic transmission vehicle.

7. CLEARANCE TABLE (LHD MODEL)

CAUTION:

This table lists various clearances that must be correctly adjusted to ensure normal vehicle driving without interfering noise, or any other faults.

Location	Minimum allowance mm (in)	Location	Minimum allowance mm (in)
① Crossmember — Pipe	5 (0.20)	⑥ Exhaust pipe — Pipe	15 (0.59)
② DOJ — Shaft or joint	14 (0.55)	⑦ Exhaust pipe — Gearbox bolt	15 (0.59)
③ DOJ — Valve housing	11 (0.43)	⑧ Side frame — Hose A and B	15 (0.59)
④ Pipe — Pipe	2 (0.08)	⑨ Cruise control pump — Hose A and B	15 (0.59)
Pipe — Crossmember		⑩ Pipe portion of hose A — Pipe portion of hose B	1.5 (0.059)
⑤ Stabilizer — Pipe	5 (0.20)	⑪ AT cooling hose — Joint	20 (0.79)

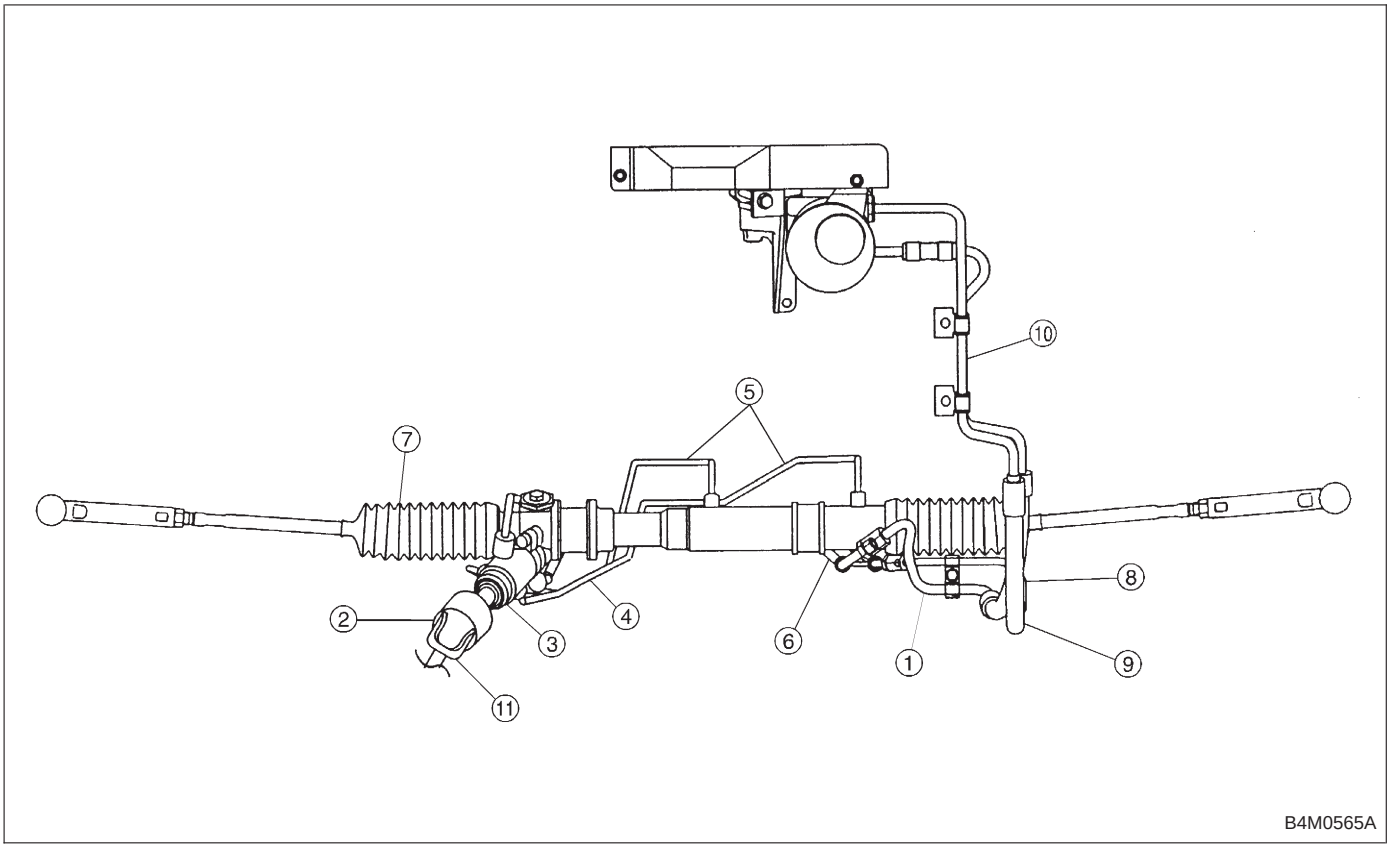

8. CLEARANCE TABLE (RHD MODEL)

CAUTION:

This table lists various clearances that must be correctly adjusted to ensure normal vehicle driving without interfering noise, or any other faults.

Location	Minimum allowance mm (in)	Location	Minimum allowance mm (in)
① Crossmember — Pipe	5 (0.20)	⑤ Stabilizer — Pipe	5 (0.20)
② DOJ — Shaft or joint	14 (0.55)	⑥ Exhaust pipe — Pipe	15 (0.59)
③ DOJ — Valve housing	11 (0.43)	⑦ Exhaust pipe — Gearbox boot	15 (0.59)
④ Pipe — Pipe	2 (0.08)	⑧ Side frame — Hose A and B	15 (0.59)
Pipe — Crossmember		⑨ Pipe portion of hose A — Pipe portion of hose B	1.5 (0.059)

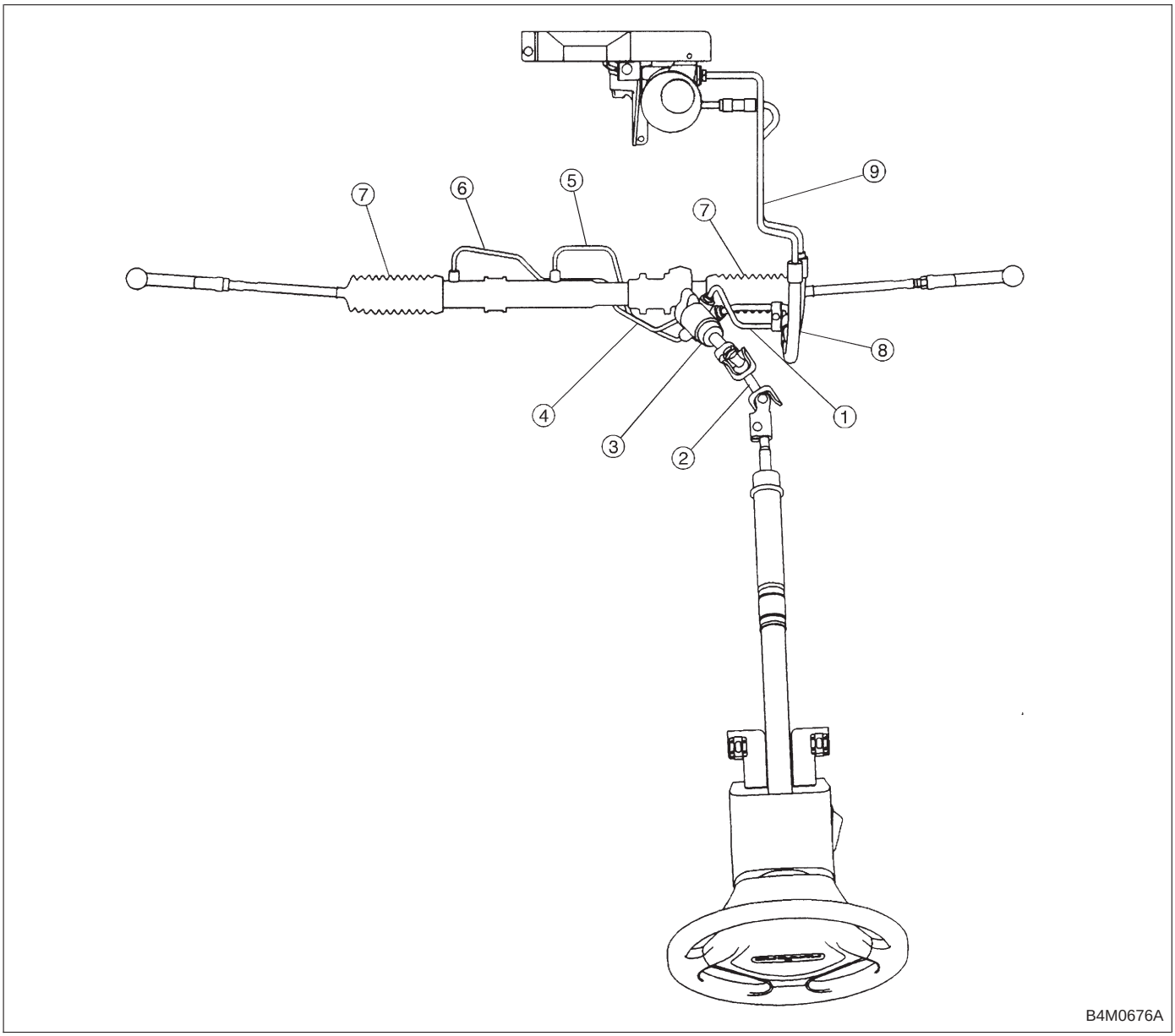

9. BREAKAGE OF HOSES

Pressure hose burst	Excessive holding time of relief status	Instruct customers.
	Malfunction of relief valve	Replace oil pump.
	Poor cold characteristic of fluid	Replace fluid.
Forced out return hose	Poor connection	Correct.
	Poor holding of clip	Retighten.
	Poor cold characteristic of fluid	Replace fluid.
Fluid bleeding out of hose slightly	Wrong layout, tensioned	Replace hose.
	Excessive play of engine due to deterioration of engine mounting rubber	Replace defective parts.
	Improper stop position of pitching stopper	Replace defective parts.
*11 Crack on hose	Excessive holding time of relief status	Replace. Instruct customer.
	Excessive tightening torque for return hose clip	Replace.
	Power steering fluid, brake fluid, engine oil, electrolyte adhere on the hose surface	Replace. Pay attention on service work.
	Too many times use in extremely cold weather	Replace. Instruct customers.

***11 Although surface layer materials of rubber hoses have excellent weathering resistance, heat resistance and resistance for low temperature brittleness, they are likely to be damaged chemically by brake fluid, battery electrolyte, engine oil and automatic transmission fluid and their service lives are to be very shortened. It is very important to keep the hoses free from before mentioned fluids and to wipe out immediately when the hoses are adhered with the fluids.**
Since resistances for heat or low temperature brittleness are gradually declining according to time accumulation of hot or cold conditions for the hoses and their service lives are shortening accordingly, it is necessary to perform careful inspection frequently when the vehicle is used in hot weather areas, cold weather area and/or a driving condition in which many steering operations are required in short time. Particularly continuous work of relief valve over 5 seconds causes to reduce service lives of the hoses, the oil pump, the fluid, etc. due to over heat.
So, avoid to keep this kind of condition when servicing as well as driving.