5. Control Valve (Power Steering Gearbox) [LHD model]

NOTE:
This section focuses on the disassembly and reassembly of control valve. For the inspection and adjustment and the service procedures for associated parts, refer to “Steering Gearbox”.

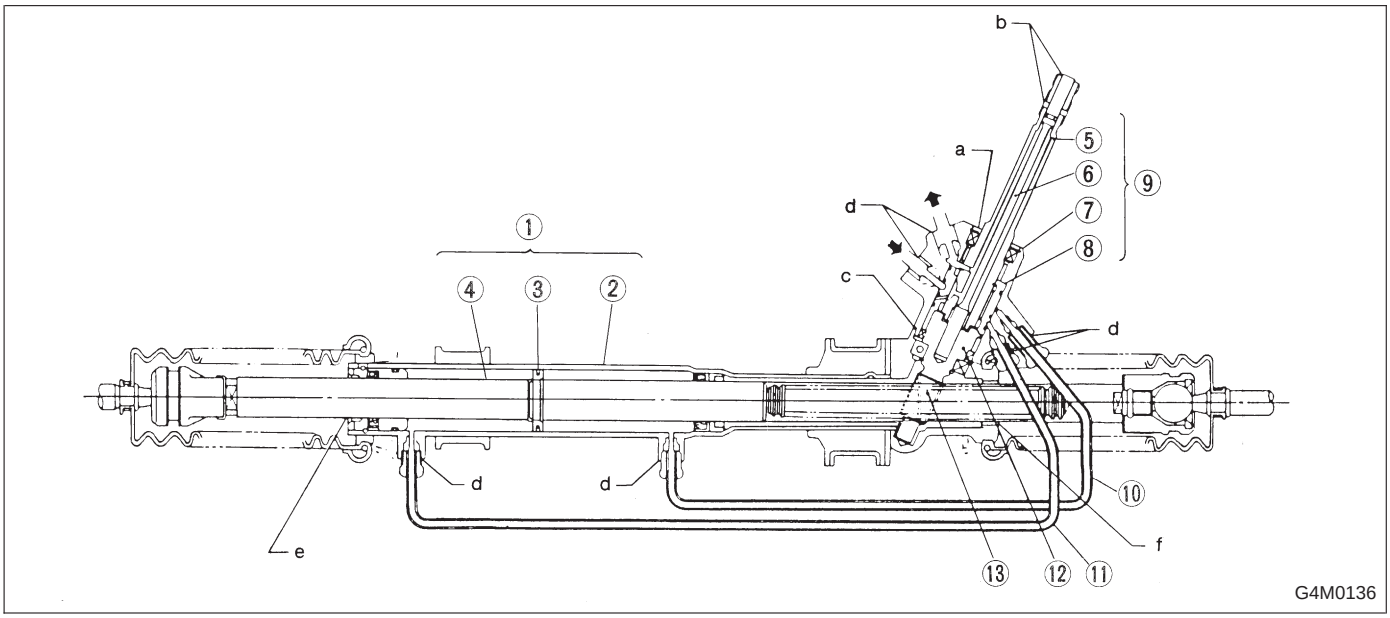

① Power cylinder
② Cylinder
③ Rack piston
④ Rack axle
⑤ Input shaft
⑥ Torsion bar
⑦ Valve housing
⑧ Valve body
⑨ Control valve
⑩ Pipe B
⑪ Pipe A
⑫ Pinion
⑬ Pinion axle

A: CHECKING OIL LEAKING POINTS

1. OIL LEAKING POINTS

1) If leak point is other than a, b, c, or d, perform check step 5) in 4-3 [W5A2] before dismounting gearbox from vehicle. If gearbox is dismounted without confirming where the leak is, it must be mounted again to locate the leak point.
2) Even if the location of the leak can be easily found by observing the leaking condition, it is necessary to thoroughly remove the oil from the suspected portion and turn the steering wheel from lock to lock about 30 to 40 times with engine running, then make comparison of the suspected portion between immediately after and several hours after this operation.
3) Before starting oil leak repair work, be sure to clean the gearbox, hoses, pipes, and surrounding parts. After completing repair work, clean these areas again.

2. OIL LEAK CHECK PROCEDURE AND REPLACEMENT PARTS

NOTE:
Parts requiring replacement are described in the smallest unit of spare parts including damaged parts and spare parts damaged. In actual disassembly work, accidental damage as well as inevitable damage to some related parts must be taken into account, and spare parts for them must also be prepared. However, it is essential to pinpoint the cause of trouble, and limit the number of replacement parts as much as possible.

1) Leakage from “a”
The oil seal is damaged. Replace valve assembly with a new one.
2) Leakage from “b”
The torsion bar O-ring is damaged. Replace valve assembly with a new one.
3) Leakage from “c”
The oil seal is damaged. Replace valve assembly with a new one.
4) Leakage from “d”
The pipe is damaged. Replace the faulty pipe or O-ring.
5) If leak is other than a, b, c, or d, and if oil is leaking from the gearbox, move the right and left boots toward tie-rod end side, respectively, with the gearbox mounted to the vehicle, and remove oil from the surrounding portions. Then, turn the steering wheel from lock to lock 30 to 40 times with the engine running, then make comparison of the leaked portion immediately after and several hours after this operation.
6) Leakage from “e”
The cylinder seal is damaged. Replace rack bush with a new one.
7) Leakage from “f”
There are two possible causes. Take following step first. Remove the pipe assembly B from the valve housing, and close the circuit with ST.

ST 926420000 PLUG

Turn the steering wheel from lock to lock 30 to 40 times with the engine running, then make comparison of the leaked portion between immediately after and several hours after this operation.

CAUTION:
- **If leakage from “f” is noted again:**

The oil seal of pinion and valve assembly is damaged. Replace pinion and valve assembly with a new one. Or replace the oil seal and the parts that are damaged during disassembly with new ones.
- **If oil stops leaking from “f”:**

The oil seal of rack housing is damaged.
Replace the oil seal and the parts that are damaged during disassembly with new ones.

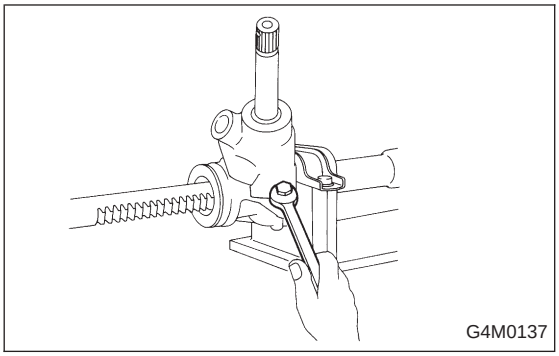

B: DISASSEMBLY

1. VALVE ASSEMBLY

1) Loosen two bolts securing valve assembly.

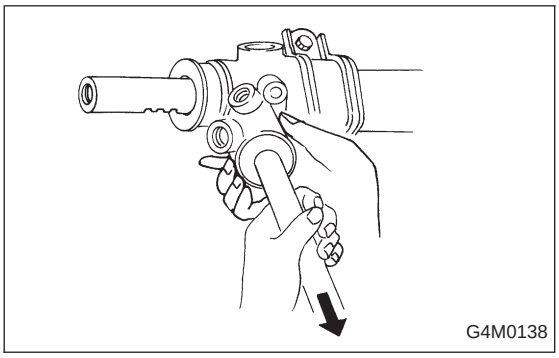

2) Carefully draw out input shaft and remove valve assembly.

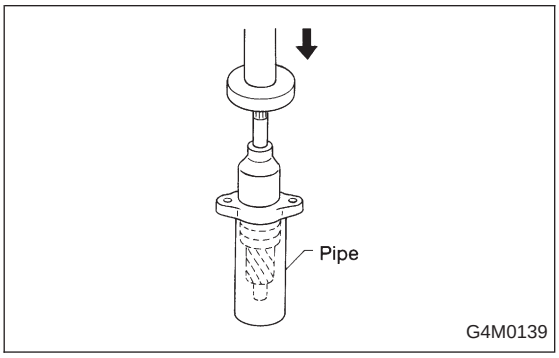

3) Draw out pinion and valve assembly from valve housing, as necessary, using pipe of I.D. 44 to 46 mm (1.73 to 1.81 in) and a press.

2. RACK ASSEMBLY

1) Slide mounting rubber to expose slit.

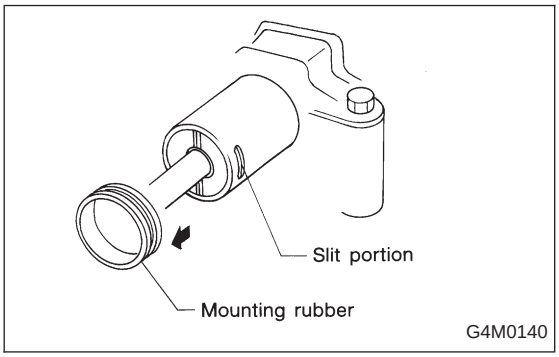

2) Rotate rack stopper in the direction of arrow using ST until the end of circlip comes out of stopper, then rotate it in the opposite direction, and pull out circlip.

ST 926340001 WRENCH

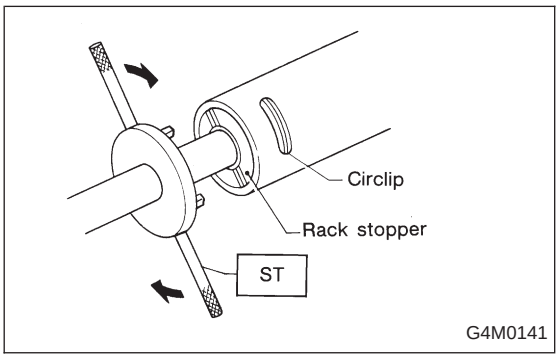

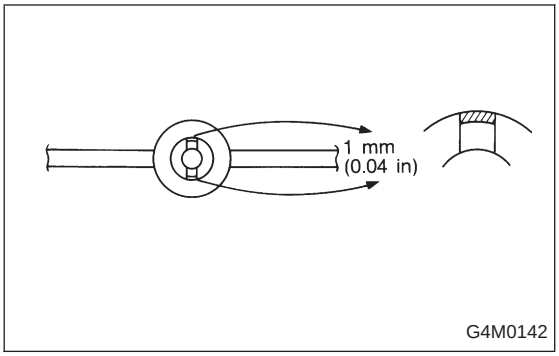

NOTE:
If ST is used, grind area (shown in figure) by 1 mm (0.04 in) in advance.

ST 926340000 WRENCH

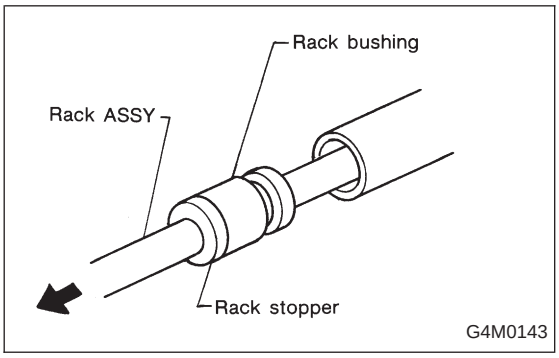

3) Pull rack assembly from cylinder side, and draw out rack bushing and rack stopper together with rack assembly.

CAUTION:
Be careful not to contact rack to inner wall of cylinder when drawing out. Any scratch on cylinder inner wall will cause oil leakage.

4) Remove rack bushing and rack stopper from rack assembly.

CAUTION:
Do not reuse removed rack bushing and circlip.

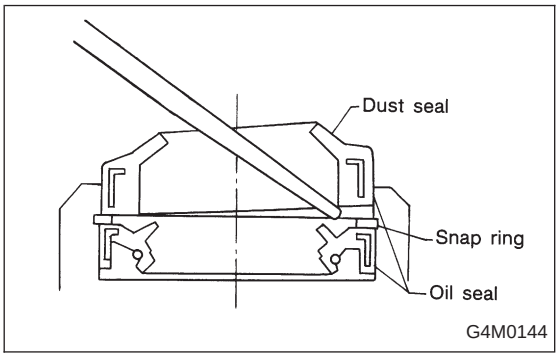

C: REPLACEMENT OF SEAL AND PACKING

1. VALVE HOUSING OIL SEAL

● Removal

1) Pry off dust seal using screwdriver.
2) Remove snap ring using snap ring pliers.

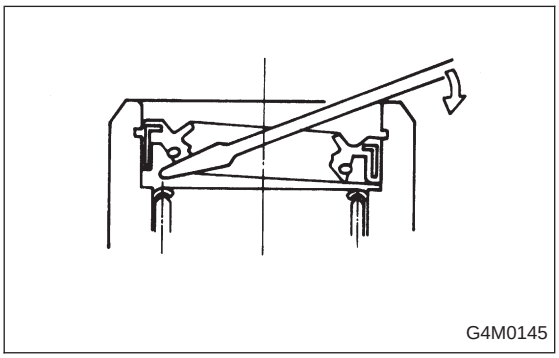

3) Pry off oil seal using screwdriver.

CAUTION:
After removing, check inside surface of valve housing for damage. If oil seal contacting surface is damaged, replace valve housing with a new one.

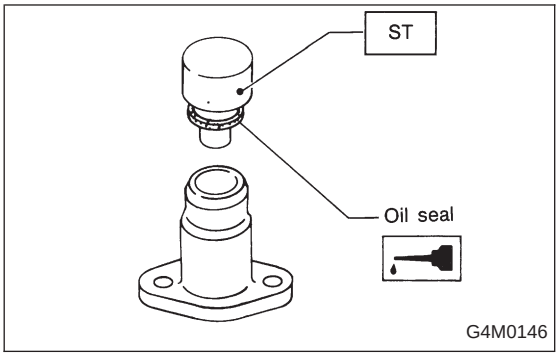

● Installation

1) Press-fit oil seal into valve housing using ST and press.

ST 927610000 INSTALLER

NOTE:
Before fitting, coat oil seal fully with ATF DEXRON II.

2) Fit snap ring in snap ring groove using snap ring pliers.

CAUTION:
Be careful not to scratch oil seal with snap ring pliers.

NOTE:
Rotate snap ring to check for proper installation.

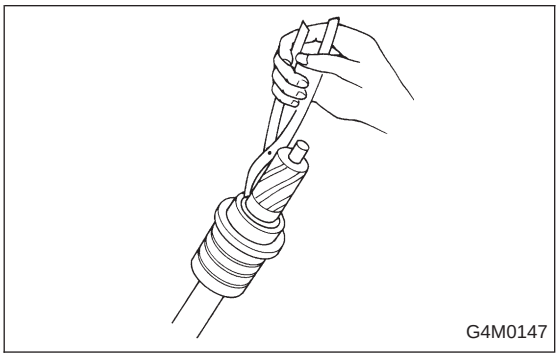

2. PINION AND VALVE ASSEMBLY

● Removal

1) Remove snap ring using snap ring pliers.

CAUTION:
- **Do not reuse removed snap ring.**
- **Be careful not to scratch pinion and valve assembly.**

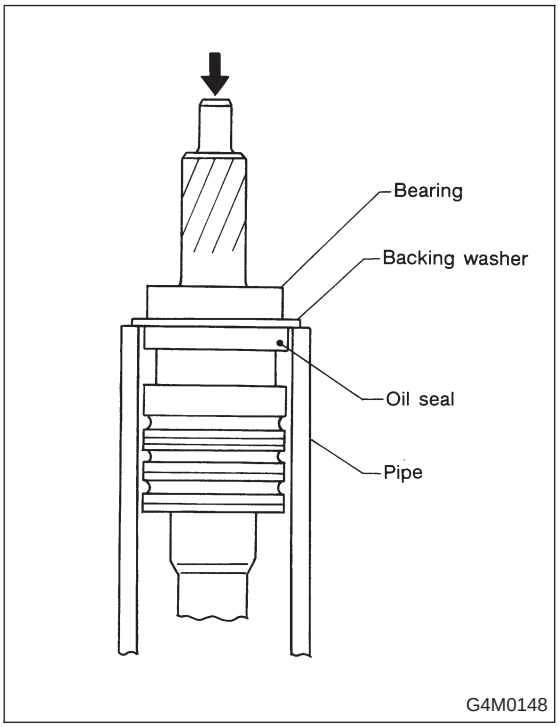

2) Press out bearing together with backing washer using pipe of I.D. 38.5 to 39.5 mm (1.516 to 1.555 in) and press.

CAUTION:
Do not reuse removed bearing.

3) Remove oil seal.

CAUTION:
Do not reuse removed oil seal.

● Installation

1) Fit pinion and valve assembly into valve housing.

NOTE:
Apply ATF DEXRON II to outer diameter surface of input shaft and outer surface of valve body seal ring, and pay special attention not to damage seal when inserting pinion and valve assembly.

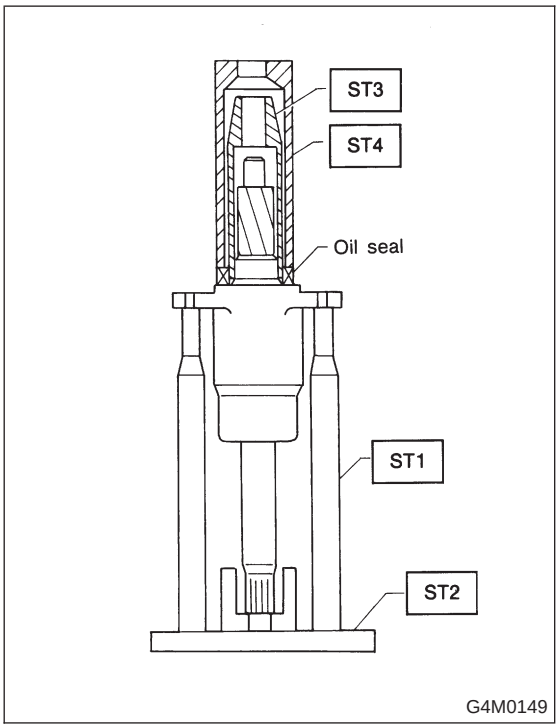

2) Secure valve assembly to ST1 and ST2.

3) Put ST3 over pinion, and insert oil seal, then force-fit oil seal into housing using ST4.

NOTE:
● Apply ATF DEXRON II to oil seal and ST3, being careful not to damage oil seal lip.
● Push oil seal until ST3 contacts housing end face.

4) Remove ST3, and fit backing washer.

ST1	926370000	INSTALLER A
ST2	927630000	STAND BASE
ST3	926360000	INSTALLER A
ST4	927620000	INSTALLER B

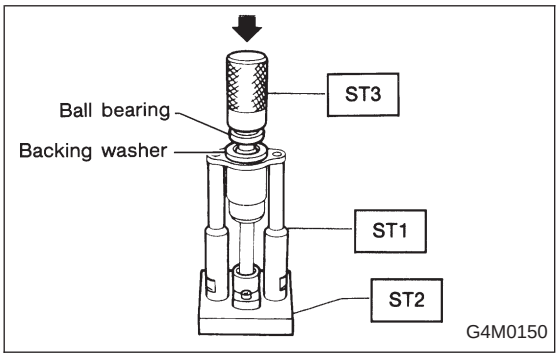

5) Force-fit ball bearing using ST3.

ST1	926370000	INSTALLER A
ST2	927630000	STAND BASE
ST3	927640000	INSTALLER B

NOTE:
Be careful not to tilt ball bearing during installation.

6) Install snap ring using snap ring pliers.

NOTE:
Rotate snap ring to check for proper installation.

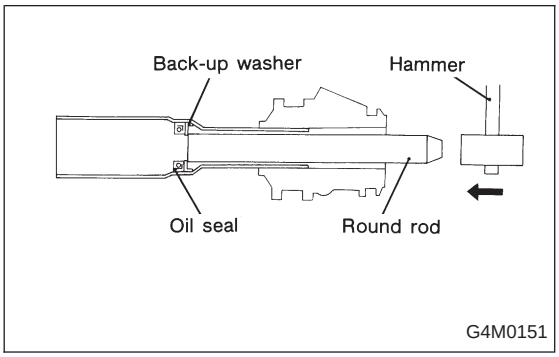

3. RACK HOUSING OIL SEAL AND BACK-UP WASHER

● Removal

Insert a round rod [26 — 27 mm (1.02 — 1.06 in) dia.] from pinion housing side and remove oil seal and back-up washer by hammering the rod.

NOTE:
● Discard removed oil seal and back-up washer.
● Apply the unchamfered end of remover to back-up washer.

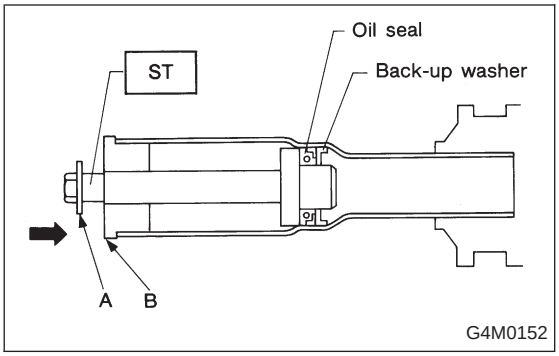

● Installation
Force-fit oil seal and back-up washer using ST.

ST 927650000 INSTALLER

CAUTION:
Be careful not to damage or scratch cylinder inner wall.

NOTE:
● Apply ATF DEXRON II to oil seal.
● Pay special attention not to install back-up washer and oil seal in wrong direction.
● Push oil seal until the stepped portion of A contacts end face of B.

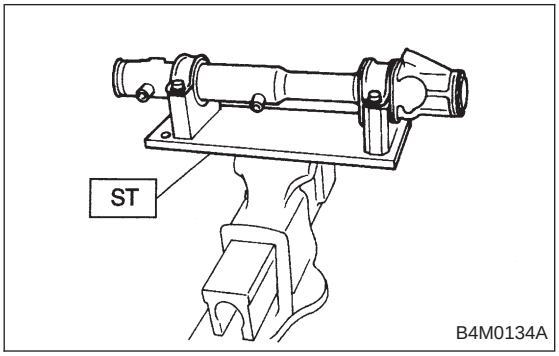

D: ASSEMBLY

1. RACK ASSEMBLY

1) Fixing rack housing
Fix rack housing in vice using ST.

ST 926200000 STAND

CAUTION:
● **When fixing rack housing in vice, be sure to use this special tool. Do not fix rack housing in vice using pad such as aluminum plates, etc.**
● **When using old rack housing, be sure to clean and remove rust before assembling. Check pinion housing bushing carefully.**

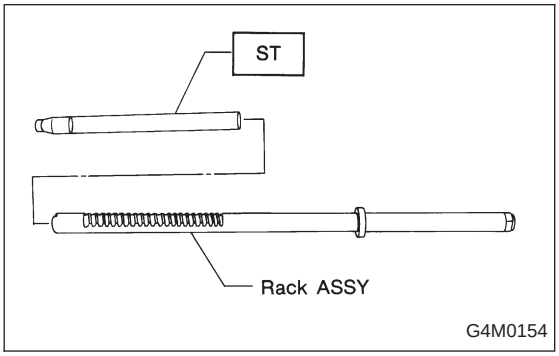

2) Fit ST over toothed portion of rack assembly, and check for binding or unsmooth insertion. If any deformation is noted on flats at the end of rack, shape by using file, and wash with cleaning fluid.
3) Apply genuine grease to teeth of thoroughly washed rack assembly, and fit ST over the toothed portion.

ST 926390001 COVER & REMOVER

NOTE:
● Be careful not to block air passage with grease. Remove excessive grease.

● After fitting cover, check air passage hole for clogging. If clogged, open by removing grease from the hole.
● Check rack shaft for damage.
● Apply ATF DEXRON II to this ST and surface of piston ring to prevent seal from being damaged.

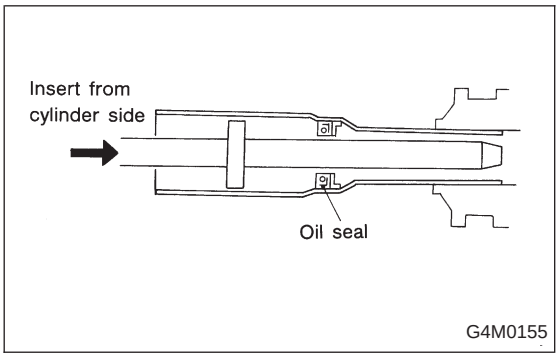

4) Insert rack assembly into rack housing from cylinder side, and remove ST after it has passed completely through oil seal.

NOTE:
Before inserting rack assembly, apply a coat of ATF DEXRON II to surfaces of ST and rack piston.

ST 926390001 COVER & REMOVER

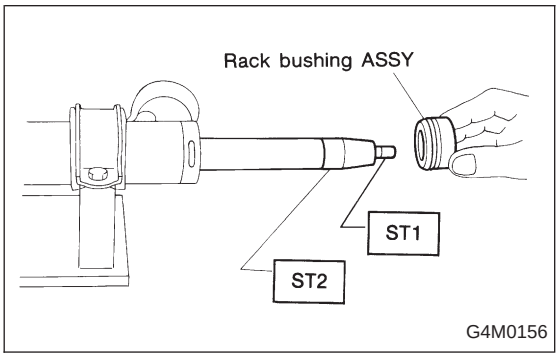

5) Fit ST1 and ST2 over the end of rack, and install rack bushing.

ST1 926400000 GUIDE
ST2 927660000 GUIDE

CAUTION:
● If burrs, or nicks are found on this guide and rack shaft portion, remove by filing.
● Dip rack bushing in ATF DEXRON II before installing, and pay attention not to damage O-ring and oil seal.

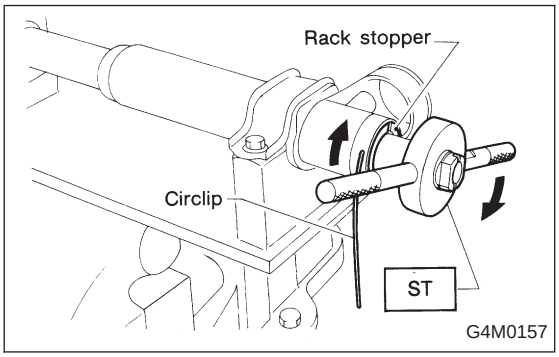

6) Insert rack stopper into cylinder tube until internal groove (on cylinder side) is aligned with external groove (on rack stopper). Turn rack stopper with ST so that rack stopper hole is seen through cylinder slits.
7) Insert rack stopper into rack housing, and wrap circlip using ST to secure rack stopper in position.

ST 926340001 WRENCH

CAUTION:
Be careful not to scratch rack while winding circlip.

NOTE:
Rotate wrench another 90 to 180° after the end of circlip has been wrapped in.

8) Fit mounting rubber onto rack housing.

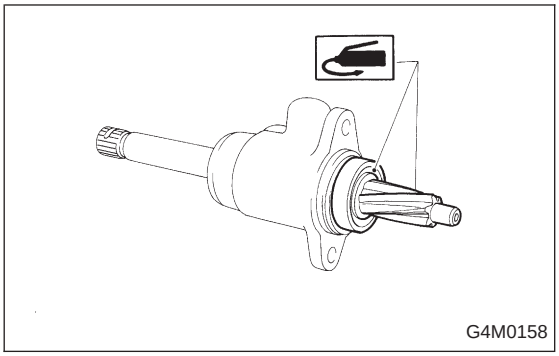

2. VALVE ASSEMBLY

1) Apply genuine grease to pinion gear and bearing of valve assembly.

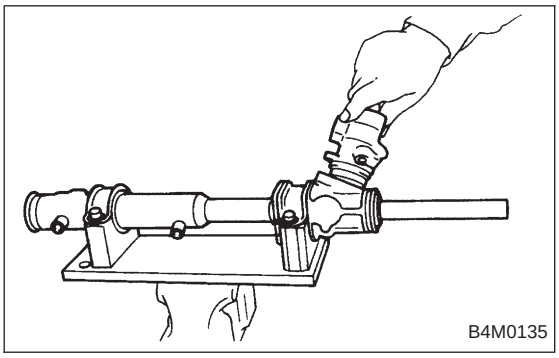

2) Install packing on valve assembly. Insert valve assembly into place while facing rack teeth toward pinion.

CAUTION:
Be sure to use a new packing.

NOTE:
Do not allow packing to be caught when installing valve assembly.

3) Tighten bolts alternately to secure valve assembly.

Tightening torque:
25±5 N·m (2.5±0.5 kg-m, 18.1±3.6 ft-lb)

CAUTION:
Be sure to alternately tighten bolts.