# 6. Control Valve (Power Steering Gearbox) [RHD model]

NOTE:
This section focuses on the disassembly and reassembly of control valve. For the inspection and adjustment and the service procedures for associated parts, refer to “Steering Gearbox”.

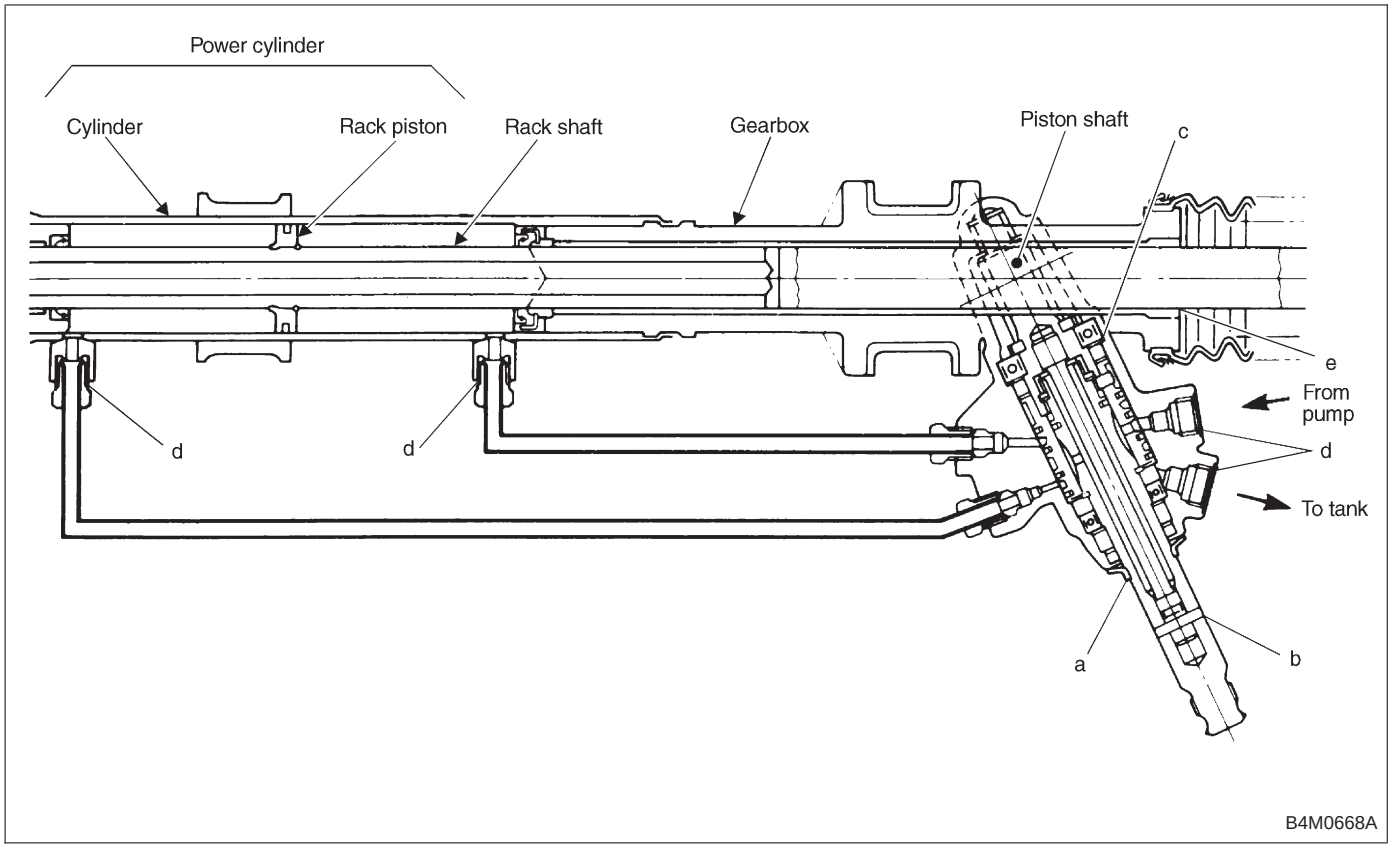


## A: CHECKING OIL LEAKING POINTS

### 1. OIL LEAKING POINTS

1) If leak point is other than a, b, c, or d, perform check step 5) in 4-3 [W6A2] before dismounting gearbox from vehicle. If gearbox is dismounted without confirming where the leak is, it must be mounted again to locate the leak point.
2) Even if the location of the leak can be easily found by observing the leaking condition, it is necessary to thoroughly remove the oil from the suspected portion and turn the steering wheel from lock to lock about 30 to 40 times with engine running, then make comparison of the suspected portion between immediately after and several hours after this operation.
3) Before starting oil leak repair work, be sure to clean the gearbox, hoses, pipes, and surrounding parts. After completing repair work, clean these areas again.

## 2. OIL LEAK CHECK PROCEDURE AND REPLACEMENT PARTS

NOTE:
Parts requiring replacement are described in the smallest unit of spare parts including damaged parts and spare parts damaged. In actual disassembly work, accidental damage as well as inevitable damage to some related parts must be taken into account, and spare parts for them must also be prepared. However, it is essential to pinpoint the cause of trouble, and limit the number of replacement parts as much as possible.

1) Leakage from “a”
The oil seal is damaged. Replace valve assembly with a new one.
2) Leakage from “b”
The torsion bar O-ring is damaged. Replace valve assembly with a new one.
3) Leakage from “c”
The oil seal is damaged. Replace valve assembly with a new one.
4) Leakage from “d”
The pipe is damaged. Replace the faulty pipe or O-ring.
5) If leak is other than a, b, c, or d, and if oil is leaking from the gearbox, move the right and left boots toward tie-rod end side, respectively, with the gearbox mounted to the vehicle, and remove oil from the surrounding portions. Then, turn the steering wheel from lock to lock 30 to 40 times with the engine running, then make comparison of the leaked portion immediately after and several hours after this operation.
6) Leakage from “e”
There are two possible causes. Take following step first. Remove the pipe assembly B from the valve housing, and close the circuit with ST.

ST 926420000 PLUG

Turn the steering wheel from lock to lock 30 to 40 times with the engine running, then make comparison of the leaked portion between immediately after and several hours after this operation.

**CAUTION:**
- **If leakage from “e” is noted again:**

**The oil seal of pinion and valve assembly is damaged. Replace pinion and valve assembly with a new one. Or replace the oil seal and the parts that are damaged during disassembly with new ones.**
- **If oil stops leaking from “e”:**

**The oil seal of rack housing is damaged.**
**Replace the oil seal and the parts that are damaged during disassembly with new ones.**

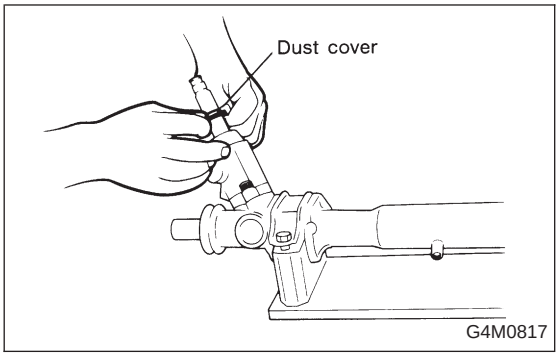


## B: DISASSEMBLY

### 1. VALVE ASSEMBLY

1) Slide dust cover out.

**CAUTION:**
- **Be careful not to scratch housing or input shaft during dust cover removal. Also do not allow foreign matter to enter housing interior.**
- **Replace dust cover with a new one if its inside bore or lips are worn or damaged.**

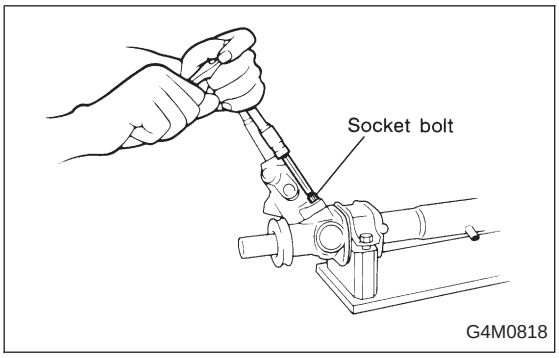


2) Remove the two bolts securing valve housing.

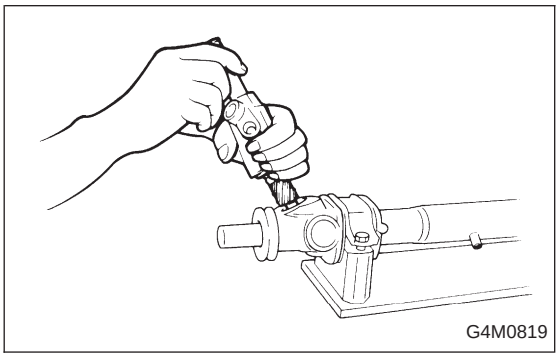


3) Remove valve housing, pinion and valve as a unit.

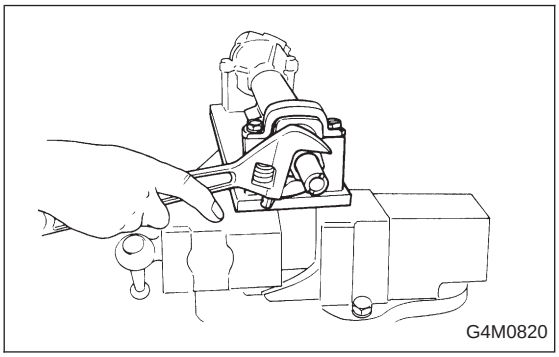


### 2. RACK ASSEMBLY

1) Remove holder using a 32 mm (1.26 in) wrench or adjustable wrench.

**CAUTION:**
**Discard old holder and replace with new one.**

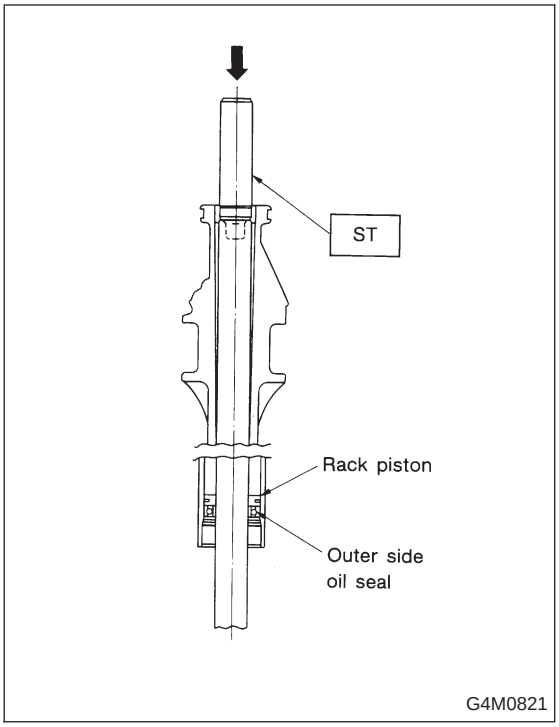


2) Install ST on valve side of rack and press outer side oil seal out.

ST 34099FA030 INSTALLER & REMOVER

**CAUTION:**
- **Block pipe connection of steering body to prevent fluid from flowing out.**
- **Do not allow rack to come in contact with inner wall of cylinder. Otherwise, cylinder wall may be scratched, resulting in oil leaks.**
- **Remove holder and rack as a unit.**
- **Check rack and steering body for bends or cracks and replace as required.**
- **Discard oil seal after removal and replace with new ones.**

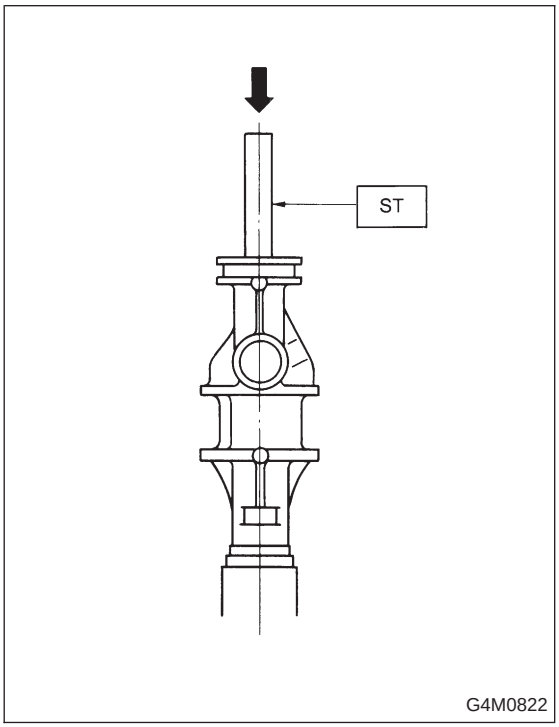


3) Insert ST from valve side and press back-up ring and oil seal out.

**CAUTION:**
**Discard back-up ring and oil seal after removal and replace with new ones.**

ST 927580000 REMOVER

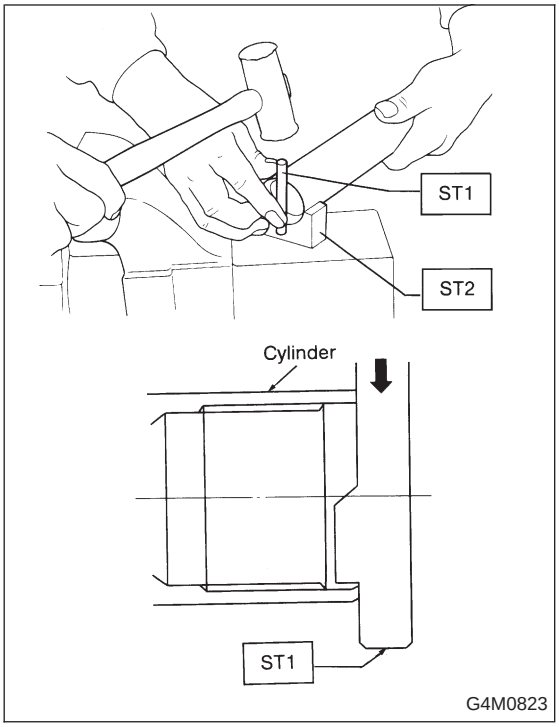


4) Using ST1 and ST2, repair cylinder's clinched sections.
ST1 34099FA080 PUNCH
ST2 34099FA070 BASE

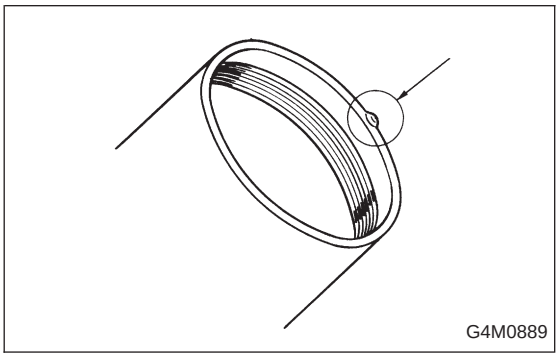


5) If cylinder edge is deformed in a convex shape, repair using an oil stone.

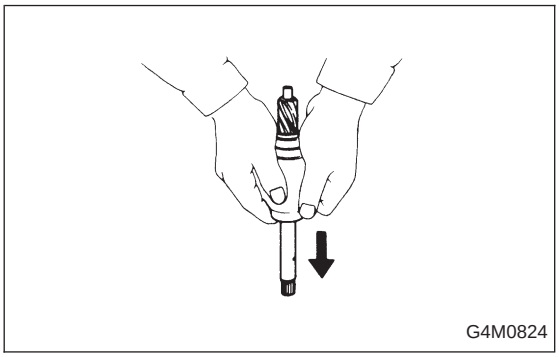


## C: REPLACEMENT OF SEAL AND PACKING

### 1. VALVE HOUSING OIL SEAL

● Removal

1) After removing dust cover, extract pinion and valve from valve housing.

**CAUTION:**

- **If pinion and valve is difficult to remove, use a press.**
- **Discard Y-packing after removal and replace with a new one.**
- **Check rotor for bends and serrations for damage and replace as required.**

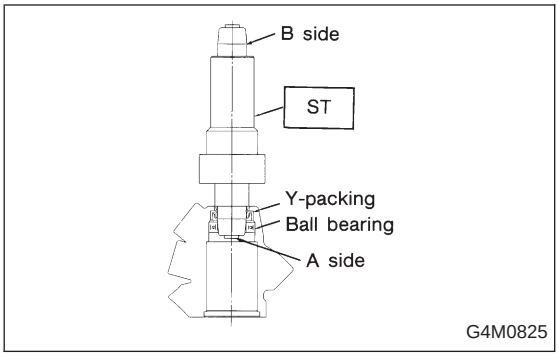


2) Using ST and press, remove dust seal, back-up washer, Y-packing and ball bearing from valve housing.

**CAUTION:**
- **Use the "A" end of remover.**
- **Do not apply a force to end surface of valve housing.**
- **Do not reuse Y-packing after removal.**

ST 34099FA000 INSTALLER & REMOVER

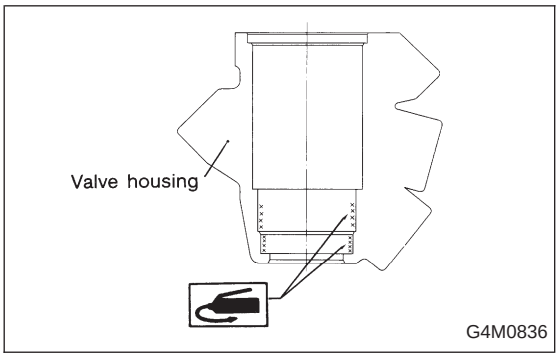


- Installation

***Specified steering grease:***
***VALIANT GREASE M2 (Part No. 003608001)***

1) Apply a coat of grease to inner wall of valve housing, Y-packing and outer perimeter of dust seal.

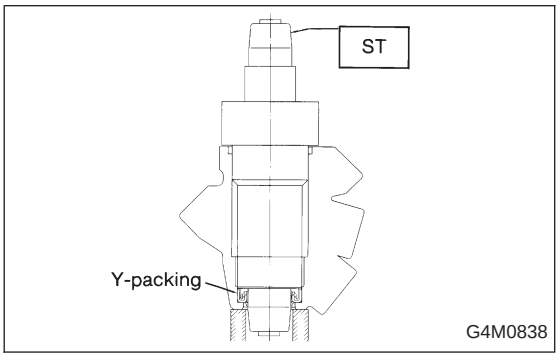


2) Using ST and press, install Y-packing in valve housing.
(1) Face Y-packing in the direction shown in figure when installing.
(2) To avoid scratching Y-packing, apply a coat of grease to contact surface of installer and Y-packing.
(3) To facilitate installation, attach Y-packing to installer and position in valve housing before pressing into place.

ST 34099FA000 INSTALLER & REMOVER

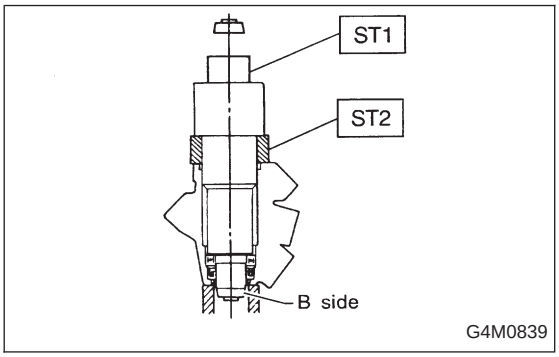


3) Attach ST2 to ST1, and press ball bearing into place using a press.

NOTE:
- To facilitate installation, attach ball bearing to remover and position in valve housing before pressing it into place.
- Use the "B" end of remover.

ST1 34099FA000 INSTALLER & REMOVER
ST2 34099FA050 SPACER

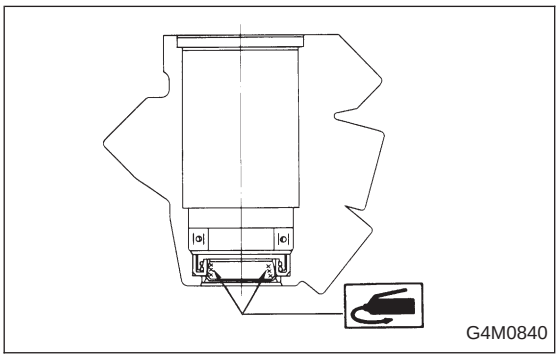


4) Charge Y-packing with specified steering grease.

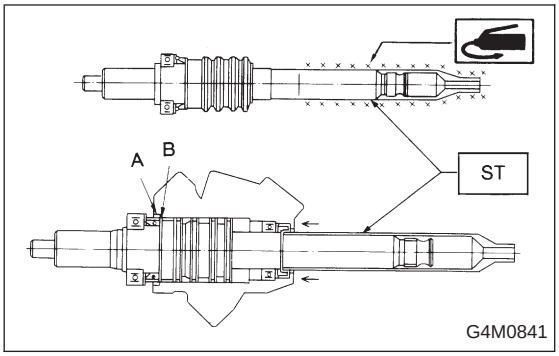


5) Apply a coat of specified steering grease to ST surface, and install ST onto end of input shaft. Insert pinion and valve until “A” of oil seal contacts “B” of valve housing. The ST is used to prevent scratching Y-packing.

ST 34099FA020 GUIDE

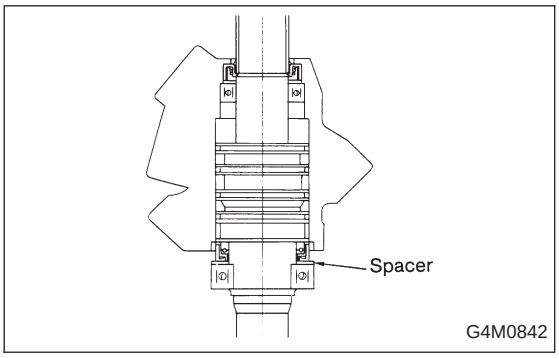


6) While supporting pinion and valve, push end of pinion until bearing contacts brazed end of valve housing.

**CAUTION:**
**Do not allow spacer to extend beyond brazed end. Otherwise, pinion cannot be inserted properly.**

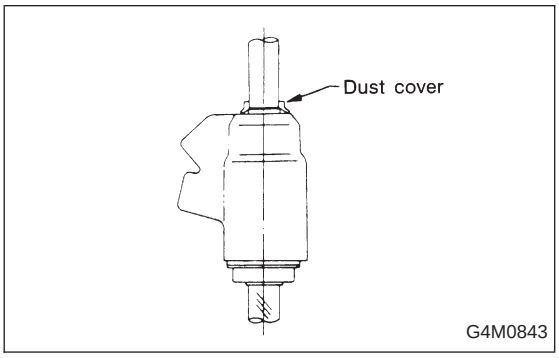


7) Apply a coat of grease to sealing lips of dust cover, and insert dust cover until it contacts staged portion of input shaft.
8) Adjust sealing lip-to-housing end clearance to 0 to 0.5 mm (0 to 0.020 in). If sealing lip is too close to housing end, steering wheel will not return smoothly; if it is too far from housing end, dust or dirt will enter the clearance.

NOTE:
Ensure that pinion and valve is properly positioned in valve housing before adjustment.

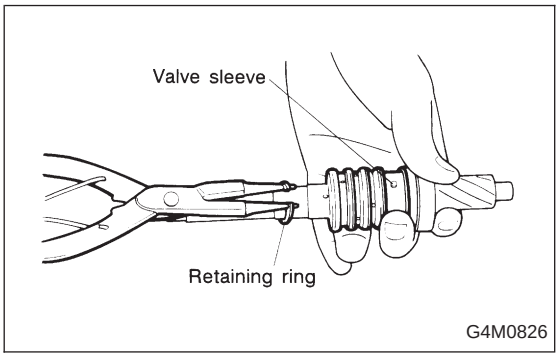


**2. PINION AND VALVE ASSEMBLY**

● Removal

1) Remove snap ring securing valve sleeve to pinion and valve, and remove valve sleeve.

**CAUTION:**
**Be careful not to scratch pinion and valve when removing snap ring.**

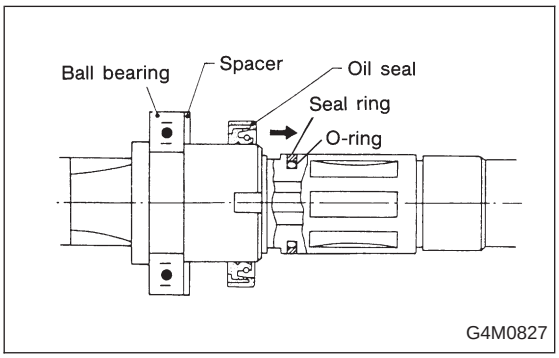


2) Remove oil seal and spacer.
3) Using a long rod, remove seal ring and O-ring from pinion.

**CAUTION:**
**Be careful not to scratch outer surface and seal ring groove of input shaft. If scratched, sealing effect will be lost, resulting in a malfunctioning valve.**

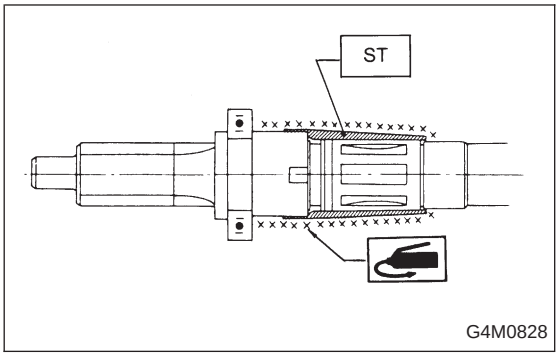


● Installation
1) Wash and clean pinion & valve and valve housing.
2) Attach ST to pinion, and apply grease to outer perimeter of the cover and mating surface of oil seal.
ST 926270000 COVER

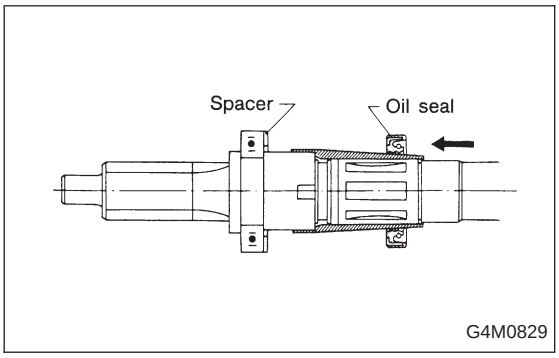


3) Apply a coat of grease to spacer and sealing lips of oil seal, and install spacer and oil seal.

**CAUTION:**
- **Face chamfered side of spacer toward oil seal.**
- **Face oil seal in correct direction.**

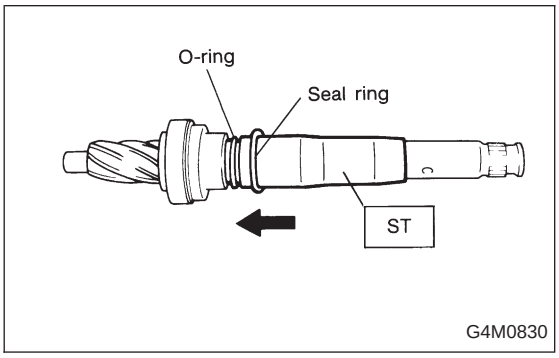


4) Install ST to input shaft, and apply a coat of grease to the cover surface. Install O-ring and seal ring.

**CAUTION:**
**Do not expand O-ring and seal ring more than necessary.**

ST 926450000 COVER

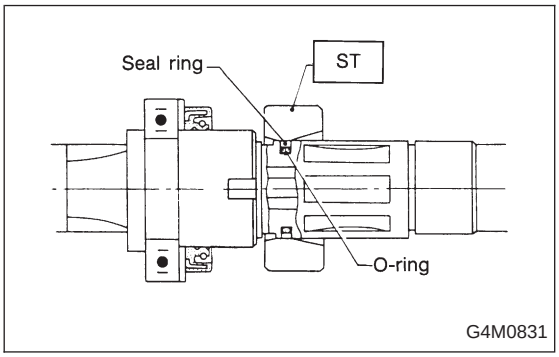


5) Apply a coat of grease to inner wall of ST, and secure seal ring assembled in step 4) as shown. Leave seal ring unattended for approximately 10 minutes until it settles down.
ST 926280000 FORMER

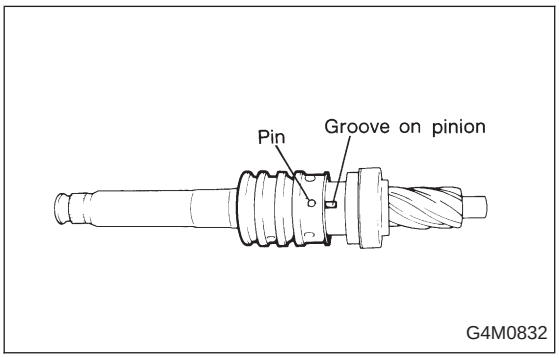


6) While aligning valve sleeve pin with groove on pinion, secure with snap ring.

**CAUTION:**
- **Be careful not to damage inner wall of valve sleeve and contact surface of pinion.**
- **Before assembling valve sleeve and pinion, clean in kerosene and dry with compressed air.**

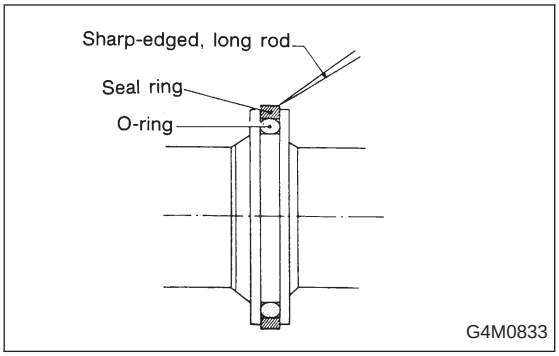


### 3. RACK PISTON SEAL RING AND O-RING

● Removal

Using a sharp-edged, long rod, remove seal ring and O-ring from rack piston.

**CAUTION:**

**Be careful not to scratch outer surface of rack piston and seal ring groove. A scratch may reduce the sealing effect, resulting in faulty piston operation.**

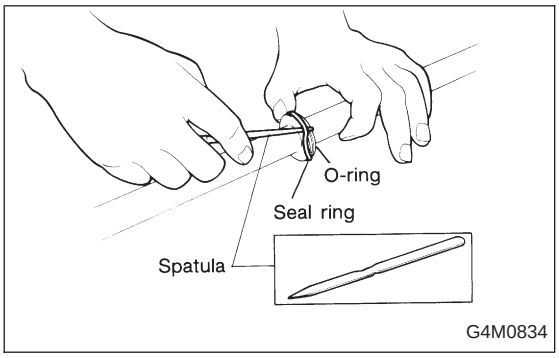


● Installation

1) Wash clean rack piston.
2) Install O-ring and seal ring in groove on rack piston.

**CAUTION:**

**● Do not expand O-ring and seal ring more than necessary.**

**● To facilitate installation of seal ring, first position one half of entire seal ring in groove. Then slowly position the second half using a spatula, as shown.**

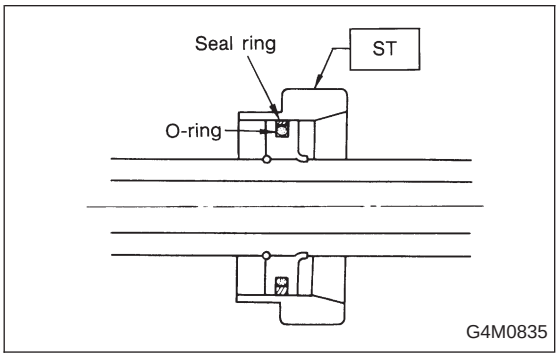


3) Apply a coat of grease to inner surface of ST and insert rack piston into it. Leave ST at least 10 minutes until seal ring settles down in place.

**CAUTION:**

**Be careful not to scratch rack, piston and seal ring during installation.**

ST 927600000 FORMER

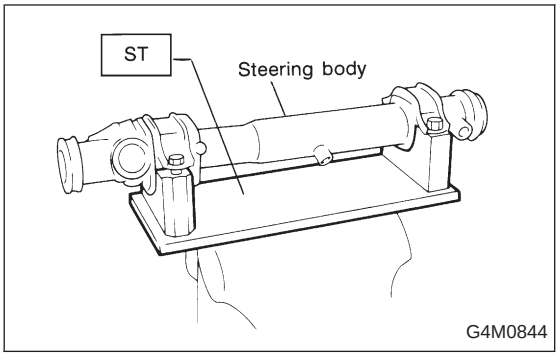


## D: ASSEMBLY

### 1. RACK ASSEMBLY

***Specified steering grease:***
***VALIANT GREASE M2 (Part No. 003608001)***

1) Attach steering body to ST as shown. Apply a coat of grease to needle bearing.
ST 926200000 STAND

**CAUTION:**
- **Use a ST to support steering body.**
- **Ensure that needle bearing is free from defects. If it is faulty, replace steering body with a new one.**

NOTE:
If steering body is removed from vehicle, be sure to remove rust and clean.

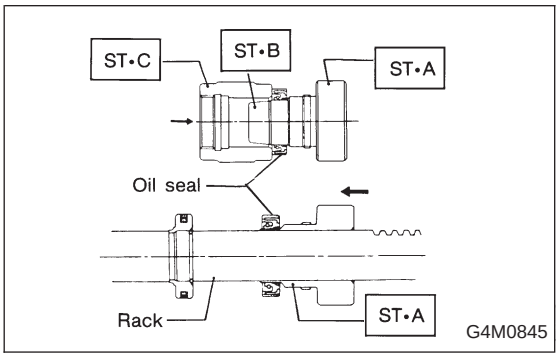


2) Using ST·B and ST·C, attach oil seal to ST·A. Insert ST·A into rack from gear side. Remove oil seal from ST·A when it approaches piston and remove STs from rack.
ST 927490000 INSTALLER; A·B·C
NOTE:
Face oil seal in the direction shown in figure.

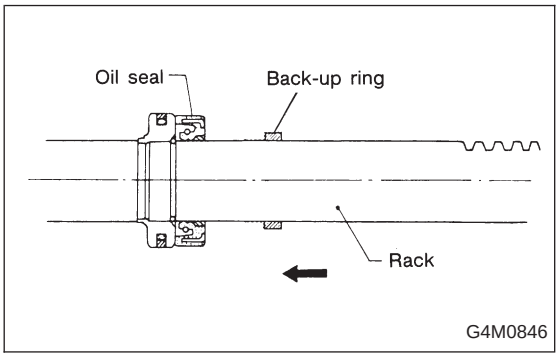


3) Install back-up ring from gear side of rack.

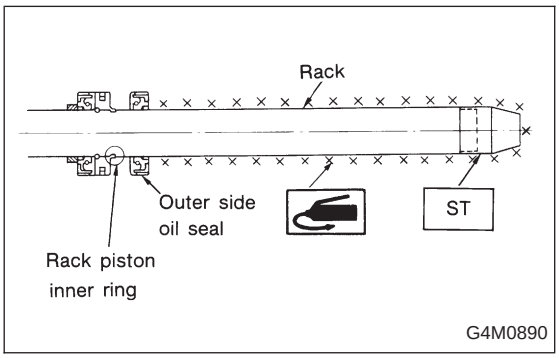


4) Install ST on rack and equally apply a thin coat of grease to rack and ST, then install oil seal.

**CAUTION:**
**Be careful not to scratch oil seal lips with piston's knurl section.**

ST 926250000 GUIDE

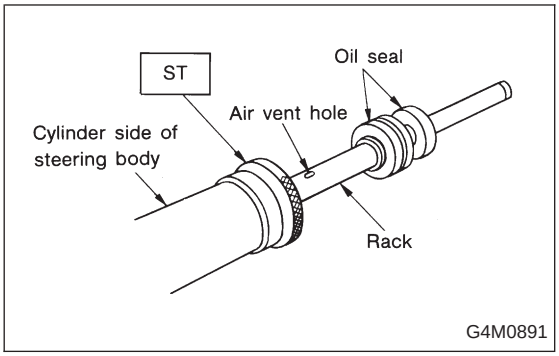


5) Apply a coat of grease to grooves in rack, sliding surface of sleeve and sealing surface of piston. Install ST on the end of steering body cylinder. Then insert rack into steering body from cylinder side.

**CAUTION:**
- **Be sure to apply grease so that it covers the entire surface of rack gear teeth.**
- **Do not allow grease to block air vent hole on rack.**

ST 34099FA010 GUIDE (Oil seal)

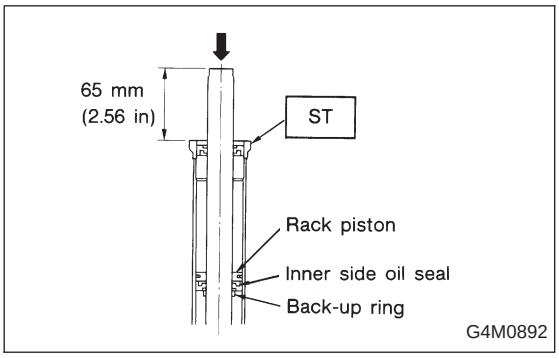


6) Slowly press inner side oil seal until distance between ST and end of rack is 65 mm (2.56 in).

**CAUTION:**
**Ensure ST's inner wall is free of scratches. Otherwise, it may damage oil seal during installation.**

ST 34099FA010 GUIDE (Oil seal)

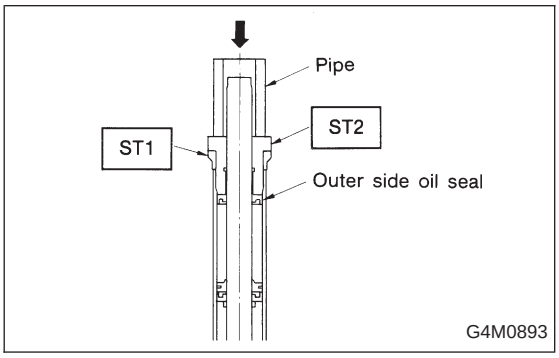


7) Pass ST2 and pipe through rack and press outer side oil seal until ST1 is in contact with ST2.

ST1 34099FA010 GUIDE (Oil seal)
ST2 34099FA040 INSTALLER (Oil seal)

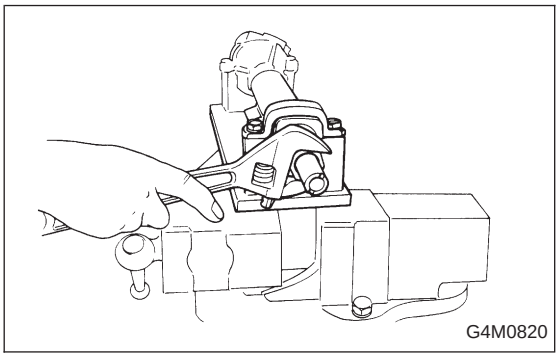


8) Install holder from cylinder side of steering body.

***Tightening torque:***
***64±5 N·m (6.5±0.5 kg-m, 47.0±3.6 ft-lb)***

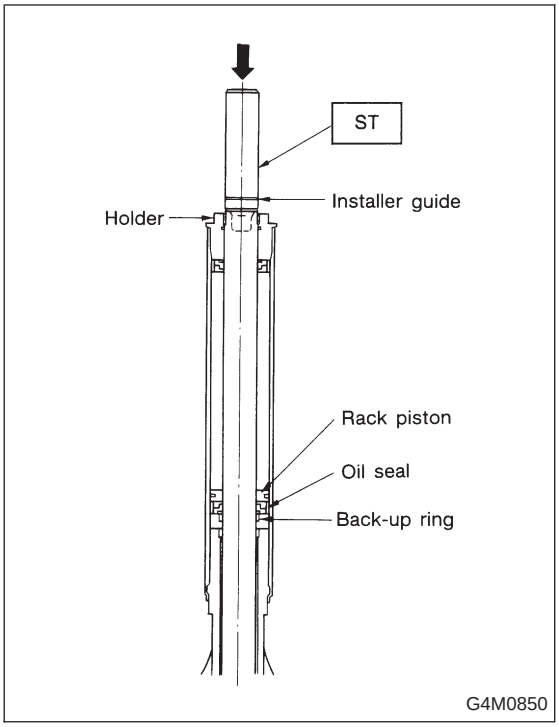


9) Attach ST to rack cylinder. Using a press, install back-up ring and oil seal.

NOTE:
Press ST until its groove is aligned with end of holder.
ST 34099FA030 INSTALLER & REMOVER

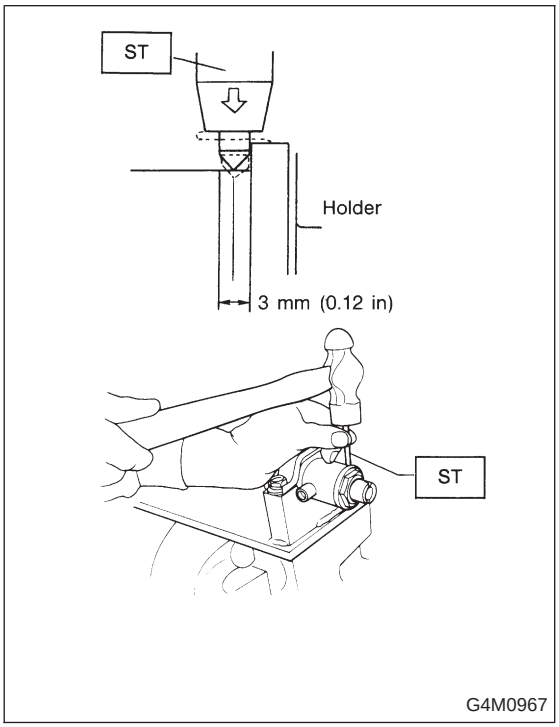


10) Using ST, clinch steering body cylinder at a point less than 3 mm (0.12 in) from holder.

**CAUTION:**
**Be careful not to deform holder.**

ST 34099FA060 PUNCH HOLDER

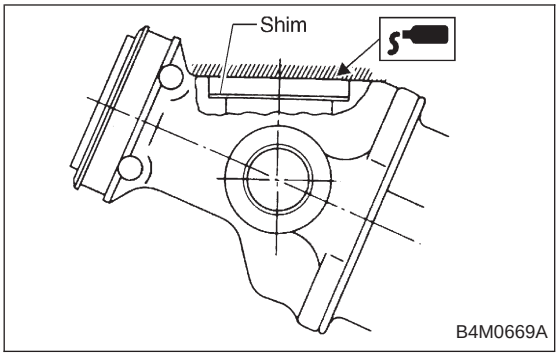


**2. VALVE ASSEMBLY**

1) Remove traces of sealer, oil, rust, etc., from mating surfaces of valve housing and steering body.
2) Position a shim in graded portion of steering body pinion housing, and apply an even coat of sealer (Fuji Bond C: 004403004 or three bond 1105 (00440310) or equivalent) to end of pinion housing.
3) Use the same number of shims as that used when steering body was removed.
4) If steering body, valve housing or pinion and valve is replaced with a new one, add two or three shims, install valve on pinion housing and tighten with two bolts to 25±5 N·m (2.5±0.5 kg-m, 18.1±3.6 ft-lb). Then, measure clearance between steering body and valve housing using a thickness gauge. Remove shims so that the clearance is zero.

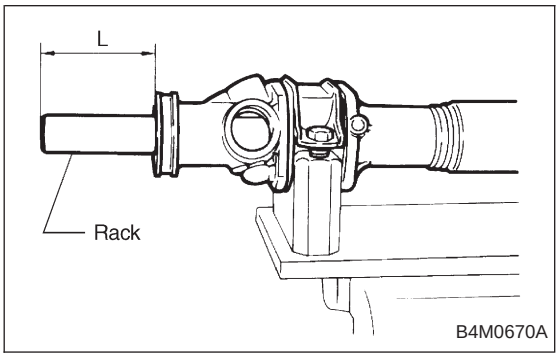


5) Extend rack “L” beyond pinion side of steering body.

***L: 70.8 mm (2.787 in)***

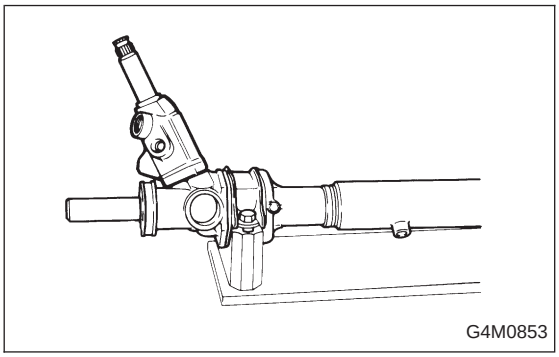


6) Apply grease to pinion gear teeth and ball bearing. Insert valve into place.
7) Alternately and slowly tighten socket bolts.

NOTE:
Replace faulty parts before installing valve. Otherwise, valve may not be installed properly.

***Tightening torque:***
***25±5 N·m (2.5±0.5 kg-m, 18.1±3.6 ft-lb)***