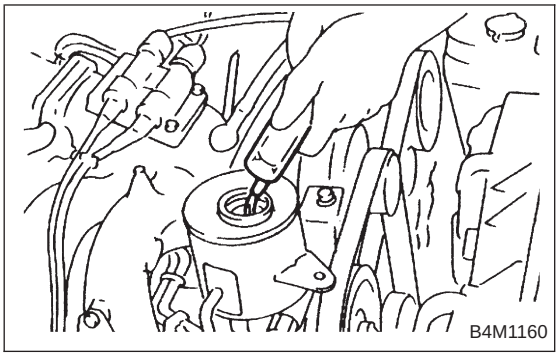

8. Oil Pump (Power Steering System)

A: REMOVAL

1) Remove ground cable from battery.
2) Drain the working fluid about 0.35 ℓ (0.4 US qt, 0.3 Imp qt) from oil tank.
3) Remove pulley belt cover bracket.

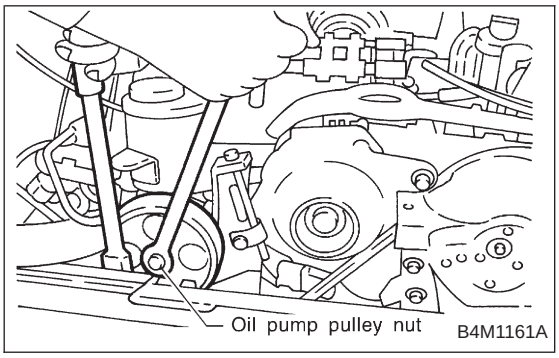

4) Loosen oil pump pulley nut, then remove bolts which secure alternator.
5) Loosen pulley belt(s).
6) Remove the nut and detach oil pump pulley.

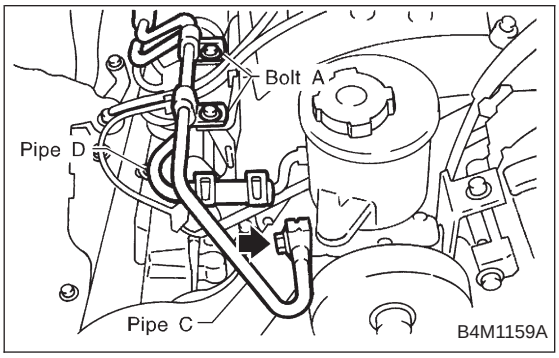

7) Remove bolt A. Disconnect pipe C from oil pump. Disconnect pipe D from oil tank.

CAUTION:
- **Do not allow fluid from the hose end to come into contact with pulley belt.**
- **To prevent foreign matter from entering the hose and pipe, cover the open ends of them with a clean cloth.**
- **Except when only oil tank needs to be inspected, detach oil tank and oil pump as a unit. Then separate one from the other on a work bench to prevent oil from spilling on any part of the engine.**

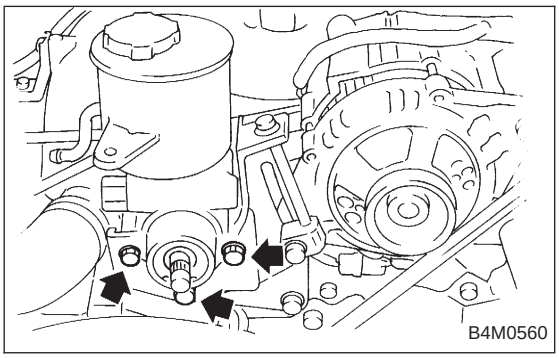

8) Remove three bolts from the front side of oil pump and detach the pump.
9) Remove three bolts from the lower side of bracket and detach the bracket.

CAUTION:
The bracket does not need to be removed unless it is damaged.

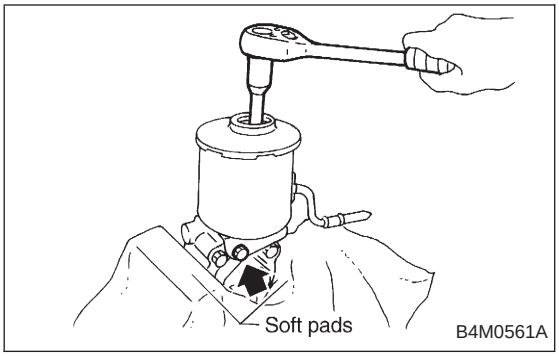

10) Place oil pump in a vise, remove two bolts from oil tank and detach oil tank.

CAUTION:
Do not place oil pump directly in the vise; use soft pads and hold oil pump lightly to protect the pump.

11) Remove O-ring from oil pump.
12) Remove stay from oil pump. (2500 cc model only)

B: CHECK

In accordance with the following table, check all removed parts for wear and damage, and make repair or replacement if necessary.

No.	Parts	Inspection	Corrective action
1	Oil pump (Exterior)	(1) Crack, damage or oil leakage	Replace oil pump with a new one.
		(2) Play of pulley shaft	Measure radial play and axial play. If any of these exceeds the service limit, replace oil pump with a new one. <Ref. to 4-3 [W8B1].>
2	Pulley	(1) Damage	Replace it with a new one.
		(2) Bend	Measure V ditch deflection. If it exceeds the service limit, replace pulley with a new one. <Ref. to 4-3 [W8B1].>
3	Cap	Crack or damage	Replace it with a new one.
4	Strainer	(1) Clogging with dirt	Wash it.
		(2) Breakage	Replace it with a new one.
5	Oil pump (Interior)	(1) Defect or burning of vane pump	Check resistance to rotation of pulley. If it is past the service limit, replace oil pump with a new one. <Ref. to 4-3 [W8B1].>
		(2) Bend in the shaft or damage to bearing	Oil pump emits a noise that is markedly different in tone and loudness from a sound of a new oil pump when turning with a string put around its pulley, replace oil pump with a new one.
6	O-ring	Crack or deterioration	Replace it with a new one.
7	Oil tank	Crack, damage or oil leakage	Replace it with a new one.
8	Bracket	Crack or damage	Replace it with a new one.

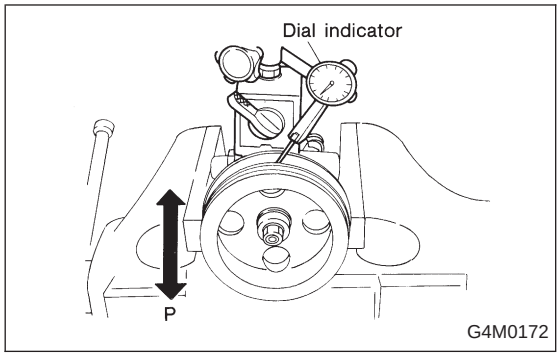

1. SERVICE LIMIT

Make a measurement as follows. If it exceeds the specified service limit, replace the parts with new ones.

CAUTION:

- **Fix oil pump on a vise to make a measurement. At this time, hold oil pump with the least possible force between two wood pieces.**
- **Do not set outside of flow control valve or pulley on a vise; otherwise outside or pulley might be deformed. Select properly sized wood pieces.**

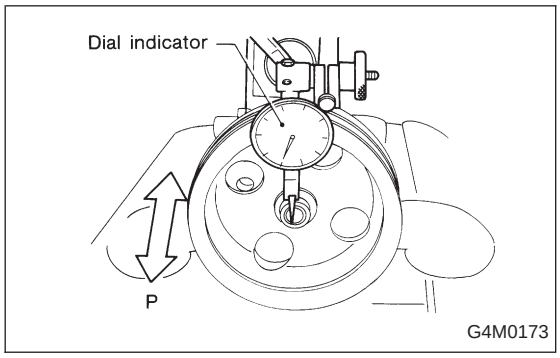

Play of pulley shaft

Service limit:

Radial play (Direction ⟷)
0.4 mm (0.016 in) or less
Axial play (Direction ⇔)
0.9 mm (0.035 in) or less

On condition:

P: 9.8 N (1.0 kg, 2.2 lb)

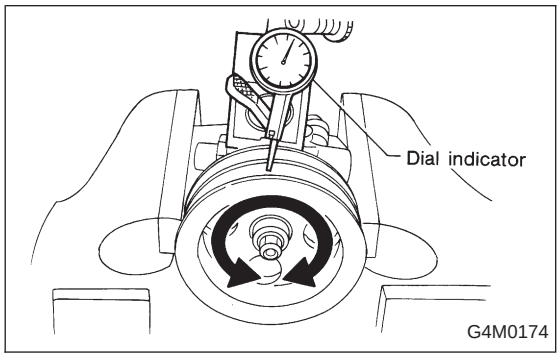

Ditch deflection of pulley

Service limit:

1.0 mm (0.039 in) or less

NOTE:
Read the value for one surface of V ditch, and then the value for another off the dial.

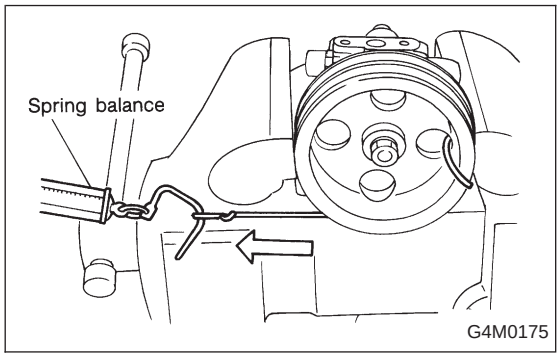

Resistance to rotation of pulley

Service limit:

Maximum load; 9.22 N (0.94 kg, 2.07 lb) or less

NOTE:

- A rather higher value may be indicated when pulley starts turning.
- Measure the load during rotation and make a judgment.

C: DISASSEMBLY

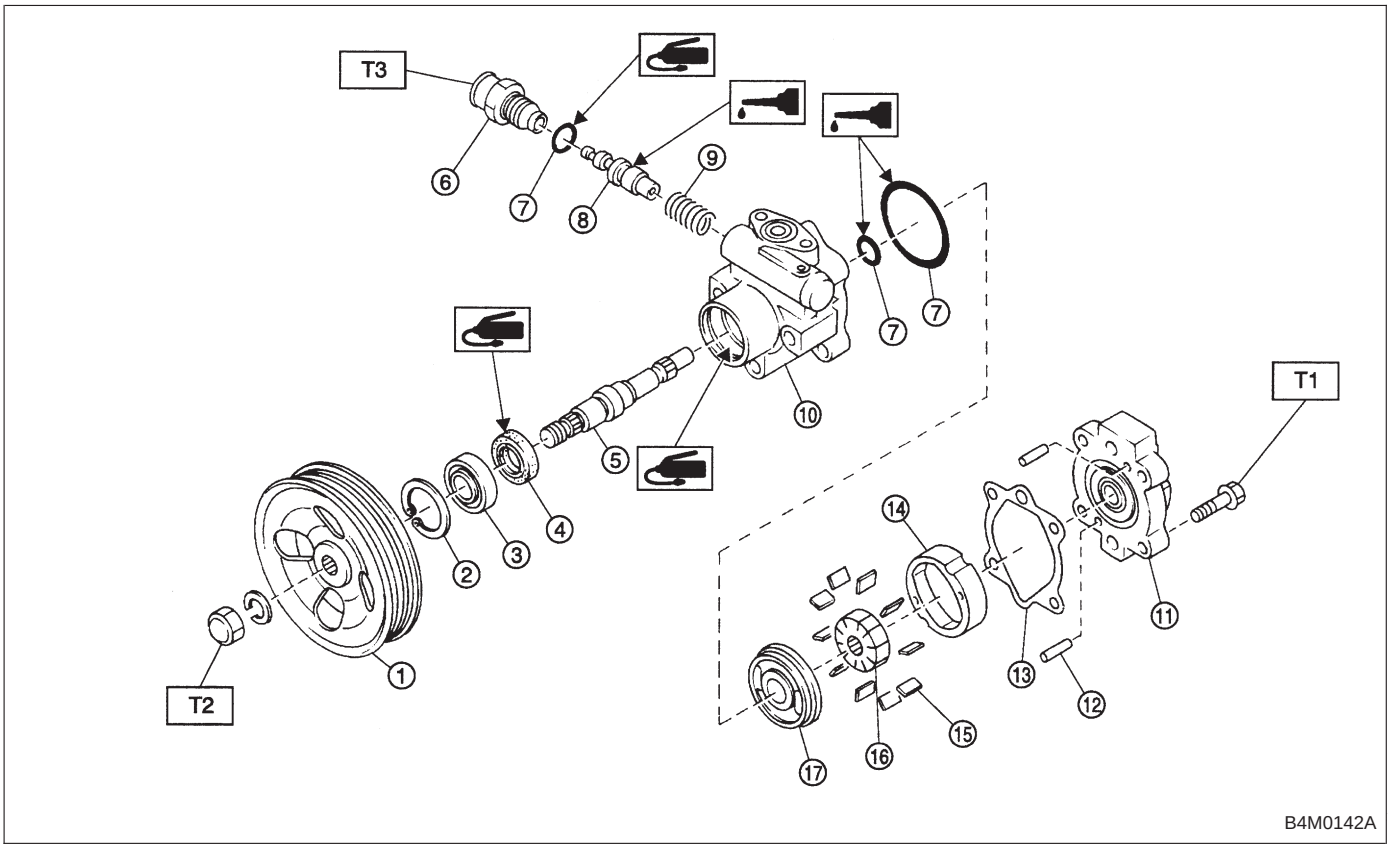

① Pulley
② Snap ring
③ Bearing
④ Oil seal
⑤ Shaft
⑥ Connector
⑦ O-ring
⑧ Spool valve
⑨ Spring
⑩ Front casing
⑪ Rear cover
⑫ Knock pin
⑬ Seal washer
⑭ Cam ring
⑮ Vane
⑯ Rotor
⑰ Side plate

Tightening torque: N·m (kg-m, ft-lb)
T1: 16±2 (1.6±0.2, 11.6±1.4)
T2: 61±7 (6.2±0.7, 45.0±5.2)
T3: 74±5 (7.5±0.5, 54.2±3.6)

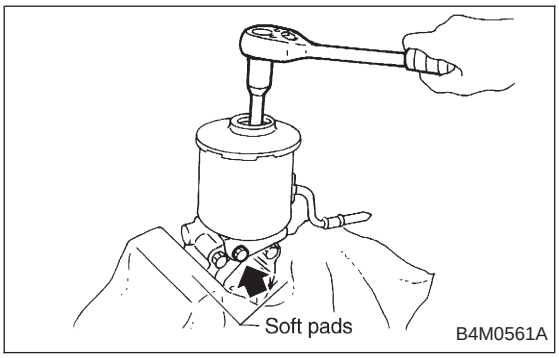

1) Oil pump body

(1) Place oil pump in a vise, and remove two bolts which secure tank.

CAUTION:
Do not place oil pump directly in vise; use soft pads and hold oil pump lightly to protect it.

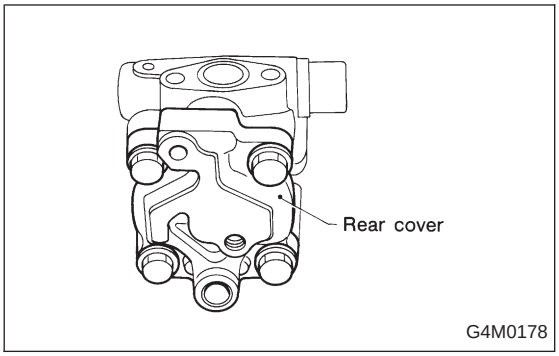

(2) Remove four bolts which secure rear cover.

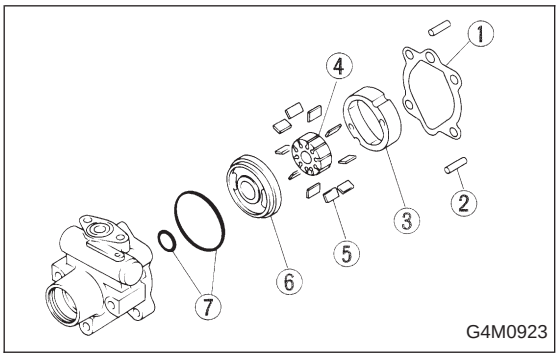

(3) Remove the following parts from front casing.

① Seal washer
② Knock pin .....2 ea.
③ Cam ring
④ Rotor
⑤ Vane .....10 ea.
⑥ Side plate
⑦ O-ring .....2 ea.

CAUTION:

Discard old seal washer; replace with a new one.

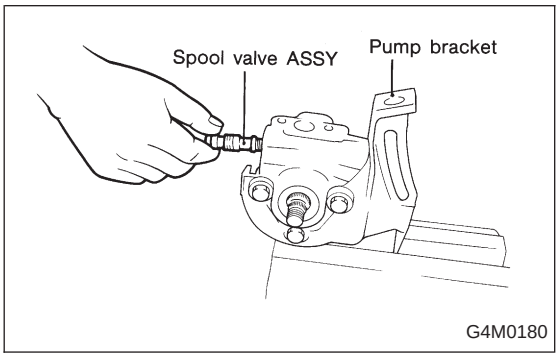

2) Control valve

Slightly loosen outlet connector, and remove connector. Remove the following parts for pump casing.

- Spool valve assembly
- Flow control spring
- Connector
- O-ring

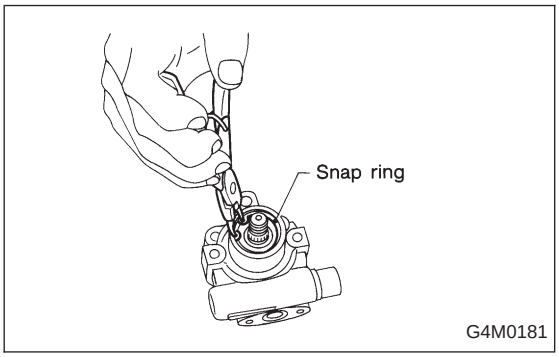

3) Shaft

(1) Remove snap ring from front casing.

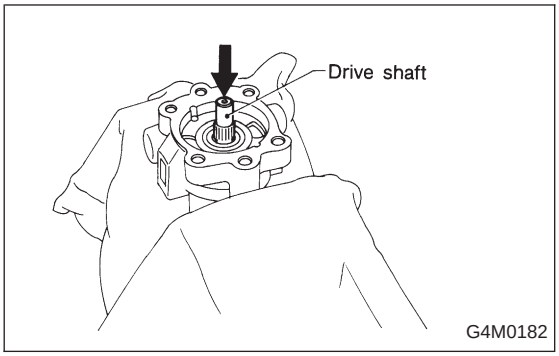

(2) Remove shaft using a hand press.

CAUTION:
- **Discard old drive shaft assembly; replace with a new one.**
- **Be careful not to scratch or dent casing's surface which serves as a seal.**

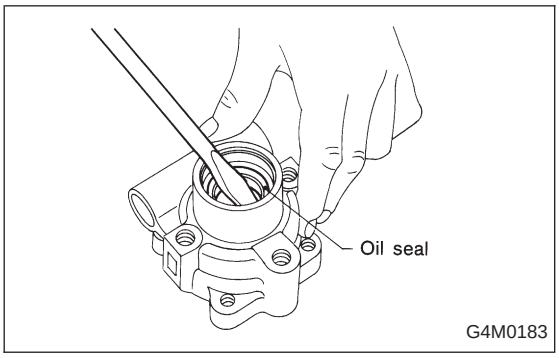

(3) Pry oil seal off using a screwdriver.

CAUTION:
Be careful not to scratch inner surface of casing.

4) Remove pressure switch.

D: INSPECTION

Perform the following inspection procedures and repair or replace defective parts.

Part name	Description	Remedy
1. Front casing	1) Damage on body surfaces 2) Excessive wear on hole, into which spool valve is inserted. 3) Wear and damage on cartridge assembly mounting surface 4) Wear and damage on surfaces in contact with shaft and oil seal	Replace with a new one together with spool valve as selective fit is made.
2. Rear cover	1) Damage on body surfaces 2) Wear and damage on sliding surfaces	Replace with a new one.
3. Shaft	1) Shaft bend 2) Wear and damage on surfaces in contact with bushing and oil seal 3) Wear and damage on rotor mounting surfaces 4) Bearing damage	Replace with a new one.
4. Side plate	Wear and damage on sliding surfaces	Replace with a new one.
5. Cam ring	Ridge wear on sliding surfaces	If damage is serious, replace with a new cartridge assembly.
6. Vane	Excessive wear on nose radius and side surfaces	
7. Rotor	1) Wear and damage on sliding surfaces 2) Ridge wear on vane sliding grooves (If light leaks with vane in slit against light source)	
	3) Damage resulting from snap ring removal	Correct with oil stone. If damage is serious, replace with a new cartridge assembly.
8. Spool valve	Damage or burrs on sliding surface periphery	Replace with a new one together with front casing as selective fit is made.
9. Connector	Damage on threads	Replace with a new one.
10. Spring	Damage	Replace with a new one.
11. Bolts and nuts	Damage on threads	Replace with a new one.

E: ASSEMBLY

1) Reassembly precautions

(1) Whenever O-rings, oil seals, and snap rings are removed, they must be replaced with new ones.
(2) Thoroughly wash parts and allow to dry. They must be kept free from cleaning oil and dust.
(3) Reassembly procedure must be performed in clean place. Ensure that parts are kept away from waste threads or other dust particles.
(4) Cleaning oil tends to stay inside the front casing. Remove it completely by blowing compressed air.
(5) Ensure that parts are free from rust. (Use specified hydraulic oil for rust prevention after cleaning and drying.)
(6) Reverse the sequence of disassembly procedures.

2) Shaft

(1) Apply grease to oil seal and inner surface of front casing (at bearing location).

CAUTION:
Make sure that the front body internal surfaces are free from damage.

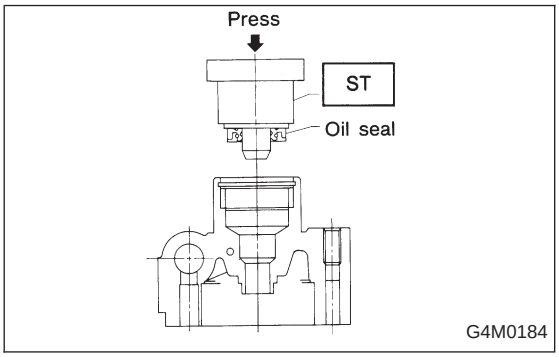

(2) Using ST, press-fit oil seal into front body.

ST 340099AA000 INSTALLER

CAUTION:
When press-fitting, use care to prevent damage to surface mating with rear body.

NOTE:
Orient oil seal toward correct direction.

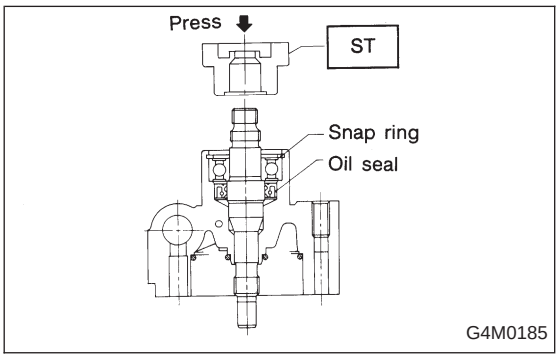

(3) Using ST, press-fit shaft assembly into front body and mount snap ring.

ST 340099AA020 INSTALLER

NOTE:
Turn snap ring to ensure that it fits right into the groove.

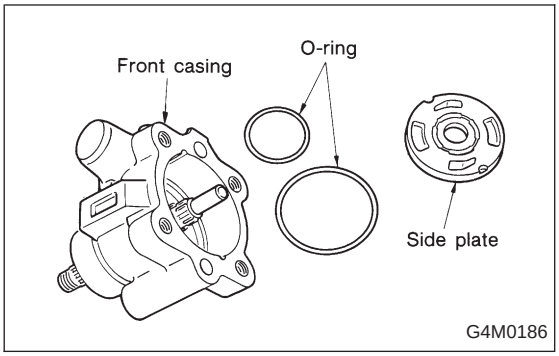

3) Cartridge assembly

(1) Apply specified hydraulic oil to O-rings and fit them into front casing.
(2) Install side plate to front casing.

CAUTION:
Use care not to let side plate gall.

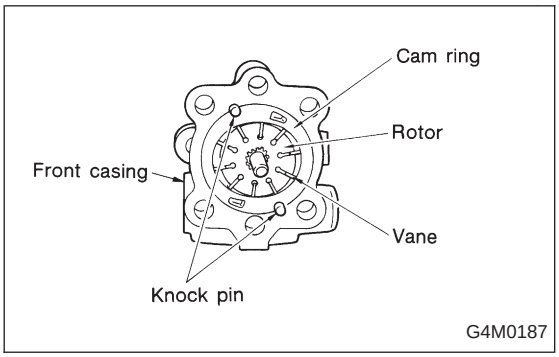

(3) Mount rotor onto shaft.
(4) Install 10 vanes into rotor with their nose radius facing toward cam ring.
(5) Install cam ring to front casing, securing with knock pins.

CAUTION:
Do not use hammer to fit knock pins in position.

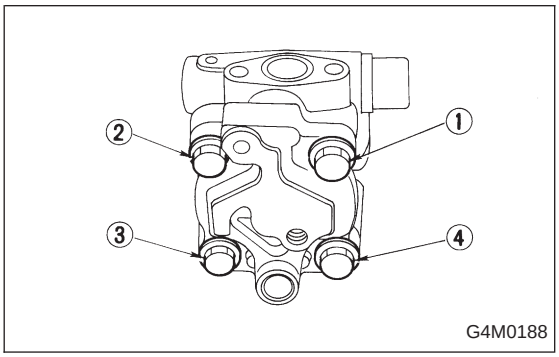

4) Rear cover

(1) Mount seal washer on front casing.
(2) With knock pin positions aligned, install rear cover.

Tightening torque:
16±2 N·m (1.6±0.2 kg-m, 11.6±1.4 ft-lb)

CAUTION:
Loosely tighten bolts in the sequence ①, ③, ②, and ④ shown in figure. Then, tighten in the same sequence.

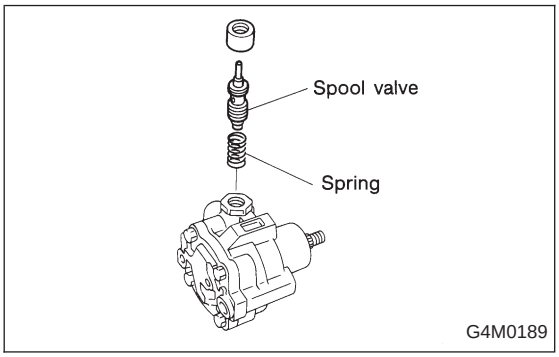

5) Spool Valve

(1) Install spring into front casing. Then, with spool valve dipped in specified hydraulic oil, install it into the front casing.

(2) Using a 5-mm dia. round bar, ensure that valve moves smoothly.
(3) Set O-ring, with grease applied to it, onto connector and secure connector to front casing.

Tightening torque:
74±5 N·m (7.5±0.5 kg-m, 54.2±3.6 ft-lb)

CAUTION:
- **Use care to prevent damage to O-ring at installation.**
- **When tightening connector, ensure that O-ring does not protrude or get caught.**

6) Check

(1) When reassembly procedures have been completed, turn shaft by hand to ensure it turns smoothly. If it binds or other unusual conditions are evident, disassemble again and check for foreign matter trapped on sliding surfaces and improper installation. Eliminate the cause of trouble.

(2) Check followings by referring to “CHECK” article.

- Excessive play in pulley shaft
- Ditch deflection of pulley
- Resistance to rotation of pulley
- Measurement of generated oil pressure

F: INSTALLATION

1) Install bracket on engine.

Tightening torque:
22±2 N·m (2.2±0.2 kg-m, 15.9±1.4 ft-lb)

2) Install oil pump on oil tank as follows outside the vehicle:

NOTE:
Prior to installation, make sure that all oil is removed from oil pump, oil tank and pipe.

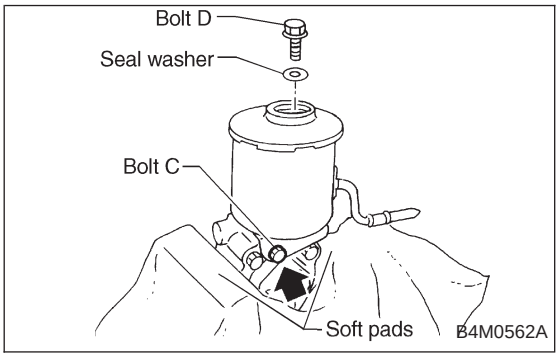

3) Place oil pump in vise.

CAUTION:
Do not place oil pump directly in vise; use soft pads and hold oil pump lightly to protect it.

4) Install O-ring on oil pump.

CAUTION:
Discard old O-ring and replace with a new one.

5) Install oil tank on oil pump.

Tightening torque:
Bolt C: 15.7±2.4 N·m
(1.60±0.24 kg-m, 11.58±1.77 ft-lb)
Bolt D: 18.1±2.5 N·m
(1.85±0.25 kg-m, 13.35±1.84 ft-lb)

CAUTION:
Discard old seal washer and replace with a new one.

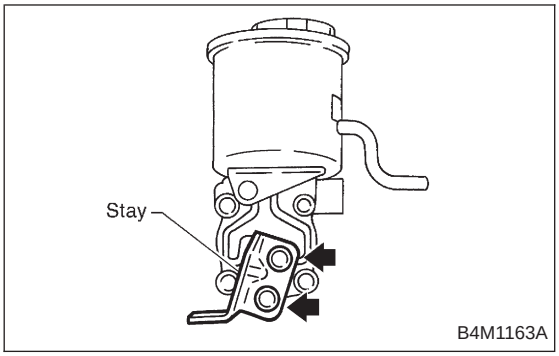

6) Install stay to oil pump. (2500 cc model only)

Tightening torque:
15.7±2.5 N·m (1.6±0.25 kg-m, 11.6±1.8 ft-lb)

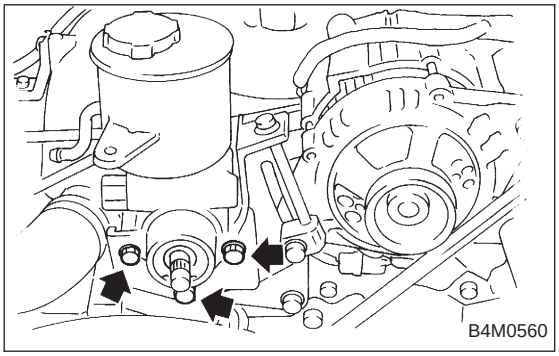

7) Install oil pump, previously assembled to oil tank, on bracket.

Tightening torque:
20.1±2.5 N·m (2.05±0.25 kg-m, 14.8±1.8 ft-lb)

8) Place oil pump pulley and tighten pulley nut temporarily.

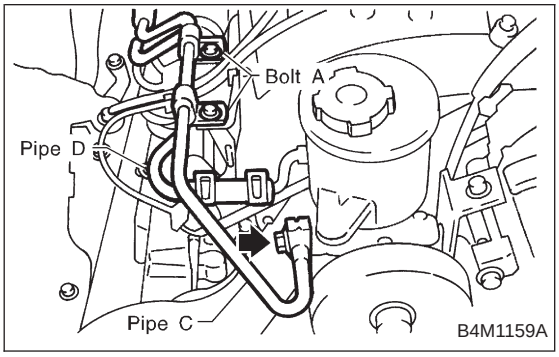

9) Interconnect pipes C and D.

Tightening torque:
Joint nut
15±5 N·m (1.5±0.5 kg-m, 10.8±3.6 ft-lb)

CAUTION:
If a hose is twisted at this step, the hose may come into contact with some other parts.

10) Connect pipe D from oil tank.
11) Connect pipe C from oil pump.

CAUTION:
Use a new gasket.

Tightening torque:
34±5 N·m (3.5±0.5 kg-m, 25.3±3.6 ft-lb)

12) Tighten bolt A.

Tightening torque:
13±3 N·m (1.3±0.3 kg-m, 9.4±2.2 ft-lb)

13) Install pulley belt to oil pump.
14) Tighten oil pump pulley nut to the specified torque.

Tightening torque:
61±7 N·m (6.2±0.7 kg-m, 44.8±5.1 ft-lb)

15) Adjust pulley belt tension. <Ref. to 1-5 [01A0].>
16) Tighten bolt belt tension.

Tightening torque:
8±2 N·m (0.8±0.2 kg-m, 5.8±1.4 ft-lb)

17) Install pulley belt cover bracket.
18) Connect minus terminal of battery.
19) Feed the specified fluid and discharge air.

NOTE:
Never start the engine before feeding the fluid; otherwise vane pump might be seized up.