9. Power Steering Fluid

A: RECOMMENDED AIR BLEEDING AND POWER STEERING FLUID

Recommended power steering fluid	Manufacturer
ATF DEXRON II or ATF DEXRON IIE	B.P.
	CALTEX
	CASTROL
	MOBIL
	SHELL
	TEXACO

1) Feed the specified fluid with its level being about 5 cm (2.0 in) lower than the mouth of tank.
2) Continue to turn steering wheel slowly from lock to lock until bubbles stop appearing in the tank while keeping the fluid at that level.
3) In case air is absorbed to deliver bubbles into piping because the fluid level is lower, leave it about half an hour and then do the step 2) all over again.
4) Start, and idle the engine.
5) Continue to turn steering wheel slowly from lock to lock again until bubbles stop appearing in the tank while keeping the fluid at that level.
It is normal that bubbles stop appearing after three times turning of steering wheel.
6) In case bubbles do not stop appearing in the tank, leave it about half an hour and then do the step 5) all over again.
7) Stop the engine, and take out safety stands after jacking up vehicle again.
Then lower the vehicle, and idle the engine.
8) Continue to turn steering wheel from lock to lock until bubbles stop appearing and change of the fluid level is within 3 mm (0.12 in).
9) In case the following happens, leave it about half an hour and then do step 8) again.

(1) The fluid level changes over 3 mm (0.12 in).
(2) Bubbles remain on the upper surface of the fluid.
(3) Grinding noise is generated from oil pump.

10) Check the fluid leakage at flare nuts after turning steering wheel from lock to lock with engine running.

CAUTION:
- **Before checking, wipe off any fluid on flare nuts and piping.**
- **In case the fluid leaks from flare nut, it is caused by dust (or the like) and/or damage between flare and tapered seat in piping.**
- **So remove the flare nut, tighten again it to the specified torque after cleaning flare and tapered seat. If flare or tapered seat is damaged, replace it with a new one.**

11) Inspect fluid level on flat and level surface with engine “OFF” by indicator of filler cap.

If the level is at lower point or below, add fluid to keep the level in the specified range of the indicator. If at upper point or above, drain fluid by using a syringe or the like.

Fluid capacity:
0.7 ℓ (0.7 US qt, 0.6 Imp qt)

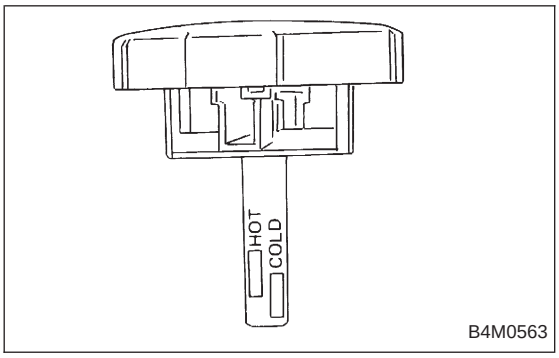

(1) Check at temperature 21°C (70°F) on reservoir surface of oil pump.

(2) Check at temperature 60°C (140°F) on reservoir surface of oil pump.