3. Steering Gearbox (Power Steering System) [LHD model]

NOTE:
For disassembly and assembly of gearbox unit, refer to section Control Valve (Power Steering Gearbox).

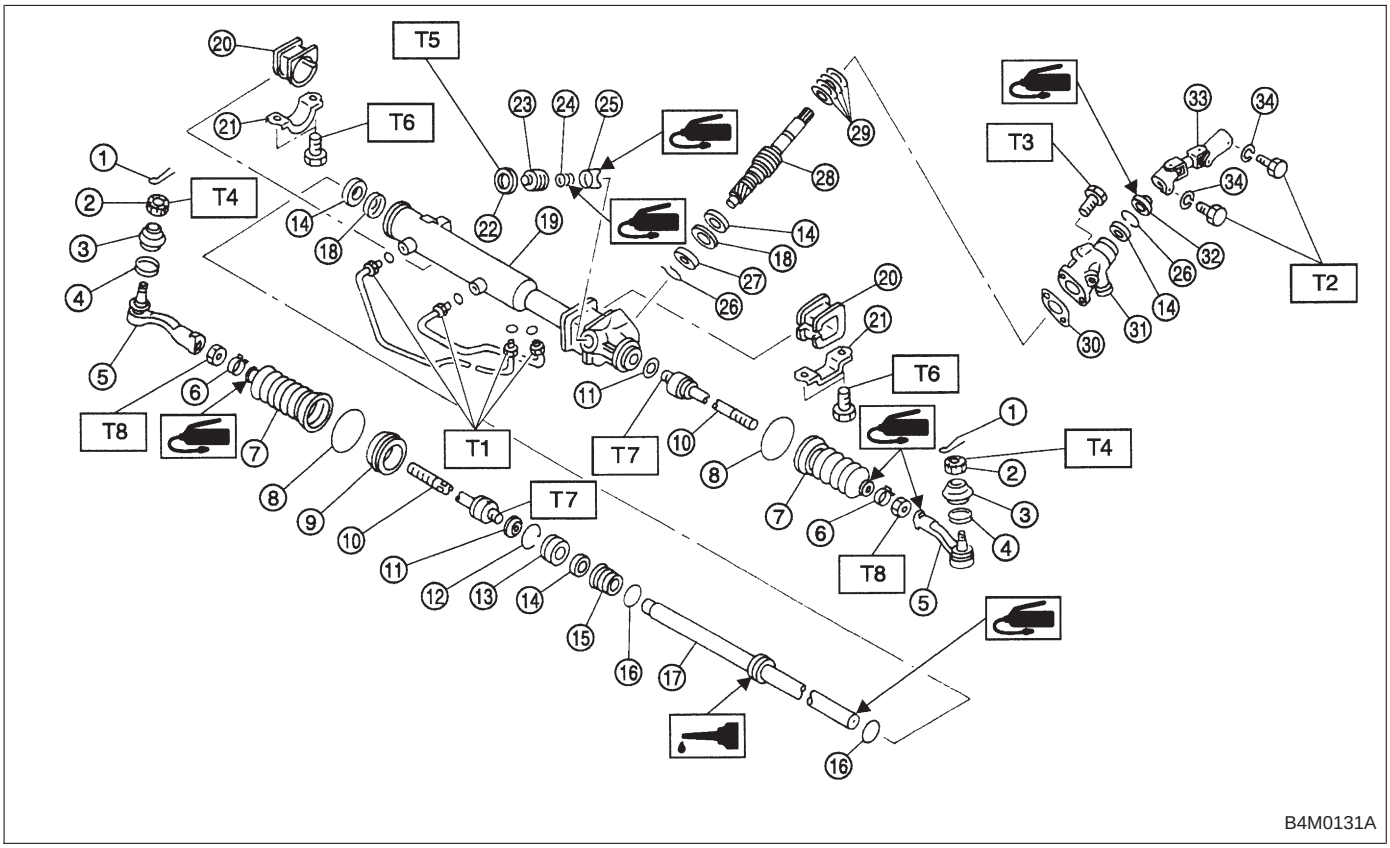

① Cotter pin
② Castle nut
③ Dust cover
④ Clip
⑤ Tie-rod end
⑥ Clip
⑦ Boot
⑧ Clip
⑨ Spacer
⑩ Tie-rod
⑪ Lock washer
⑫ Circlip
⑬ Rack stopper
⑭ Oil seal
⑮ Rack bushing
⑯ O-ring
⑰ Rack
⑱ Back-up washer
⑲ Rack housing
⑳ Adapter
㉑ Clamp
㉒ Lock nut
㉓ Adjusting screw
㉔ Spring
㉕ Sleeve
㉖ C-ring
㉗ Ball bearing
㉘ Valve
㉙ Seal ring
㉚ Packing
㉛ Valve housing
㉜ Dust seal
㉝ Universal joint
㉞ Spring washer

Tightening torque: N·m (kg-m, ft-lb)
T1: 13±3 (1.3±0.3, 9.4±2.2)
T2: 24±3 (2.4±0.3, 17.4±2.2)
T3: 25±5 (2.5±0.5, 18.1±3.6)
T4: 27.0±2.5 (2.75±0.25, 19.9±1.8)
T5: 39±10 (4.0±1.0, 29±7)
T6: 59±12 (6.0±1.2, 43±9)
T7: 78±10 (8.0±1.0, 58±7)
T8: 83±5 (8.5±0.5, 61.5±3.6)

A: REMOVAL

1) Disconnect battery minus terminal.
2) Loosen front wheel nut.
3) Lift vehicle and remove front wheels.
4) Remove front exhaust pipe assembly.

WARNING:
Be careful, exhaust pipe is hot.

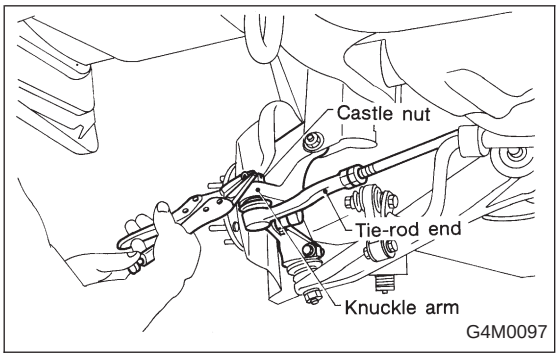

5) Using a puller, remove tie-rod end from knuckle arm after pulling off cotter pin and removing castle nut.

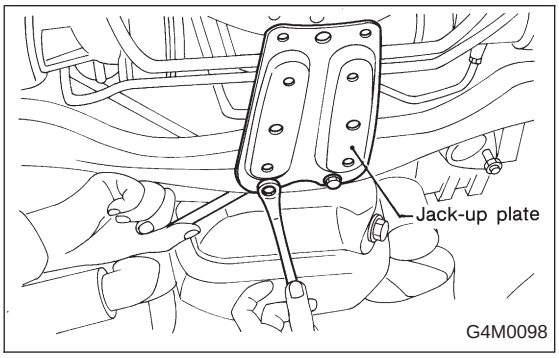

6) Remove jack-up plate and front stabilizer.

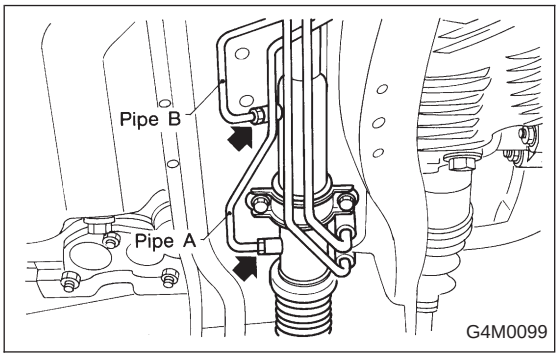

7) Remove one pipe joint at the center of gearbox, and connect vinyl hose to pipe and joint. Discharge fluid by turning steering wheel fully clockwise and counterclockwise. Discharge fluid similarly from the other pipe.

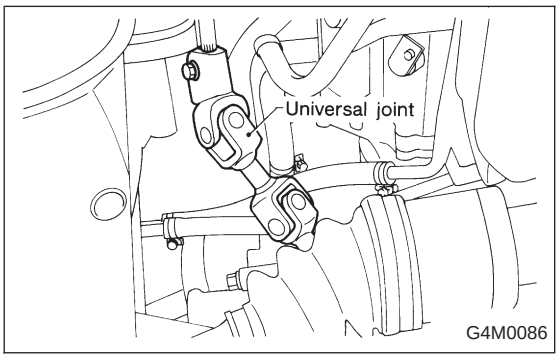

8) Remove lower side bolt of universal joint, then remove upper side bolt and lift the joint upward.

NOTE:
Place a mark on the joint and mating serration so that they can be re-installed at the original position.

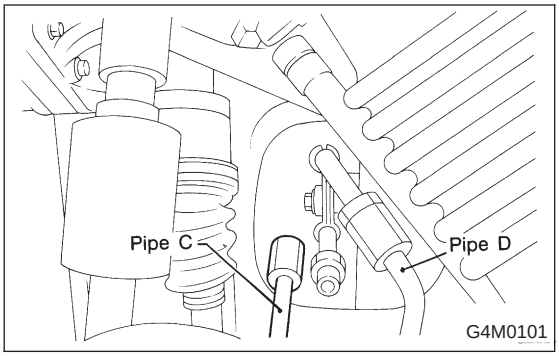

9) Disconnect pipes C and D from pipe of gearbox.

CAUTION:
Be careful not to damage these pipes.

NOTE:
Disconnect upper pipe D first, and lower pipe C second.

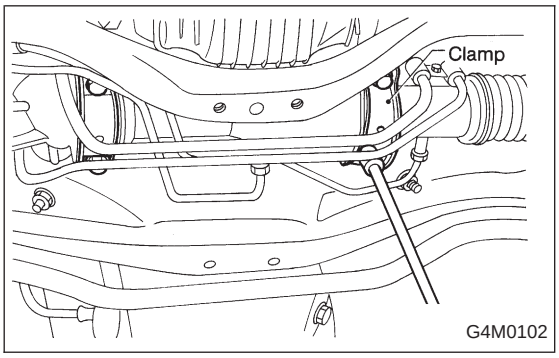

10) Remove clamp bolts securing gearbox to crossmember, and remove gearbox.

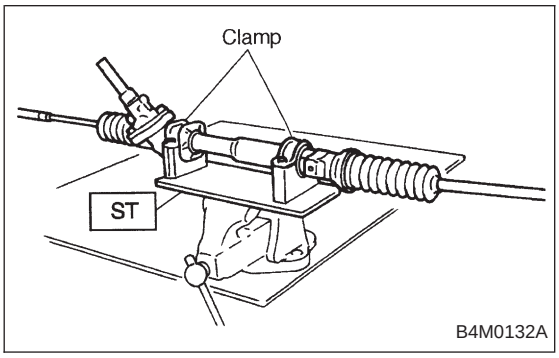

B: DISASSEMBLY

1) Disconnect four pipes from gearbox.
2) Secure gearbox removed from vehicle in vice using ST.

ST 926200000 STAND

CAUTION:
Secure the gearbox in a vice using the ST as shown. Do not attempt to secure it without this ST.

3) Remove tie-rod end and lock nut from gearbox.

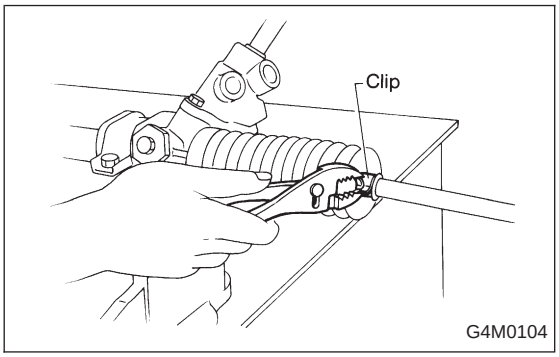

4) Remove small clip from boot using pliers, and move boot to tie-rod end side.

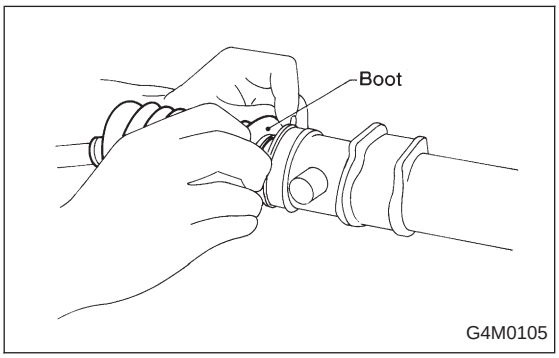

5) Remove boot together with large clips.

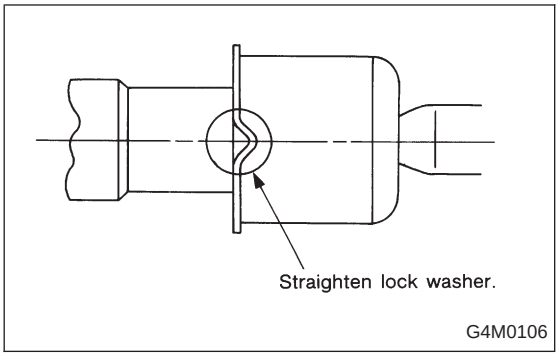

6) Straighten lock washer under ball joint.

CAUTION:

- **Be extremely careful not to hit surface of right hand rack; otherwise, oil leakage may result.**
- **Tie-rod lock washer must be replaced with a new one whenever it is removed.**

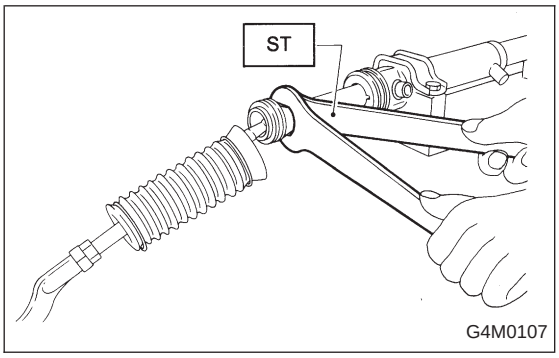

7) Loosen ball joint using ST and spanner and remove tie-rod from rack.

NOTE:
When loosening ball joint, securely fix the rack using ST.

ST 925700000 WRENCH

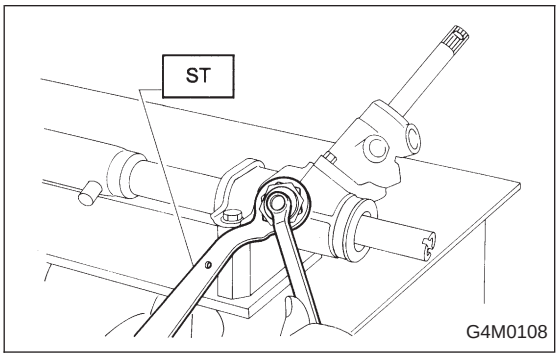

8) Loosen lock nut using ST, and remove adjusting screw.

ST 926230000 SPANNER

9) Remove spring and sleeve.

10) Remove dust seal.

CAUTION:

Be careful not to damage housing and input shaft, or to allow foreign matters to get inside when removing dust seal.

C: INSPECTION

1) Clean all disassembled parts, and check for wear, damage, or any other faults, then repair or replace as necessary.
2) When disassembling, check inside of gearbox for water. If any water is found, carefully check boot for damage, input shaft dust seal, adjusting screw and boot clips for poor sealing. If faulty, replace with new parts.

No.	Parts	Inspection	Corrective action
1	Input shaft	(1) Bend of input shaft (2) Damage on serration	If bend or damage is excessive, replace entire gearbox.
2	Dust seal	(1) Crack or damage (2) Wear	If outer wall slips, lip is worn out or damage is found, replace it with new one.
3	Rack and pinion	Poor mating of rack with pinion	(1) Adjust backlash properly. By measuring turning torque of gearbox and sliding resistance of rack, check if rack and pinion engage uniformly and smoothly with each other. (Refer to “Service limit”.) (2) Keeping rack pulled out all the way so that all teeth emerge, check teeth for damage. Even if abnormality is found in either (1) or (2), replace entire gearbox.
4	Gearbox unit	(1) Bend of rack shaft (2) Bend of cylinder portion (3) Crack or damage on cast iron portion	Replace gearbox with new one.
		(4) Wear or damage on rack bush	If free play of rack shaft in radial direction is out of the specified range, replace gearbox with new one. (Refer to “Service limit”.)
		(5) Wear on input shaft bearing	If free plays of input shaft in radial and axial directions are out of the specified ranges, replace gearbox with new one. (Refer to “Service limit”.)
5	Boot	Crack, damage or deterioration	Replace.
6	Tie-rod	(1) Looseness of ball joint (2) Bend of tie-rod	Replace.
7	Tie-rod end	Damage or deterioration on dust seal	Replace.
8	Adjusting screw spring	Deterioration	Replace.
9	Boot clip	Deterioration	Replace.
10	Sleeve	Damage	Replace.
11	Pipes	(1) Damage to flared surface (2) Damage to flare nut (3) Damage to pipe (4) Damage to O-ring	Replace.

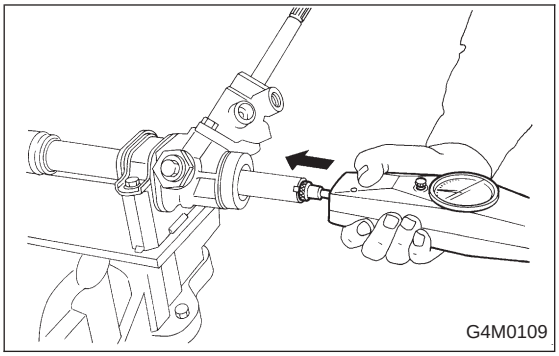

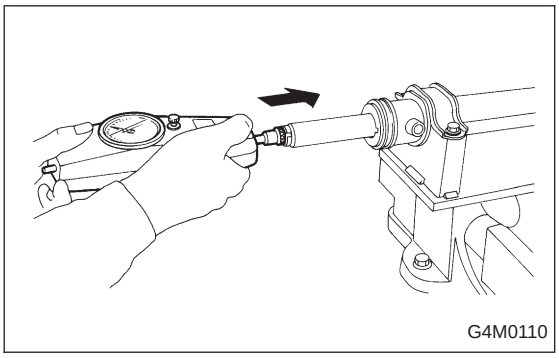

1. SERVICE LIMIT

Make a measurement as shown in the figures. If it exceeds the specified service limit, adjust or replace.

NOTE:
When making a measurement, vise gearbox by using ST. Never vise gearbox by inserting aluminum plates, etc. between vise and gearbox.

ST 926200000 STAND

Sliding resistance of rack shaft:

Service limit
240.3 N (24.5 kg, 54.0 lb) or less

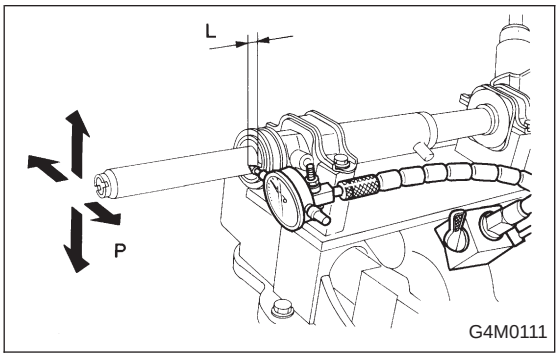

2. RACK SHAFT PLAY IN RADIAL DIRECTION

Right-turn steering:

Service limit
0.15 mm (0.0059 in) or less

On condition
L: 5 mm (0.20 in)
P: 98 N (10 kg, 22 lb)

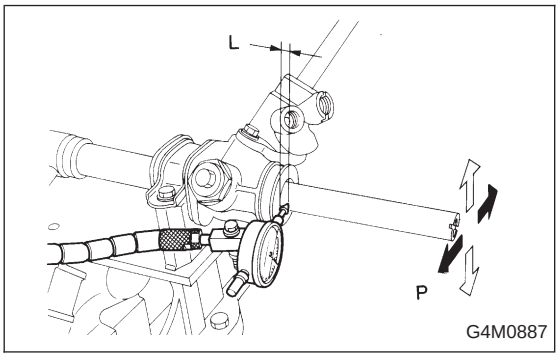

Left-turn steering:

Service limit
Direction ⇦ ⇨
0.3 mm (0.012 in) or less
Direction ⬅ ➡
0.15 mm (0.0059 in) or less

On condition
L: 5 mm (0.20 in)
P: 98 N (10 kg, 22 lb)

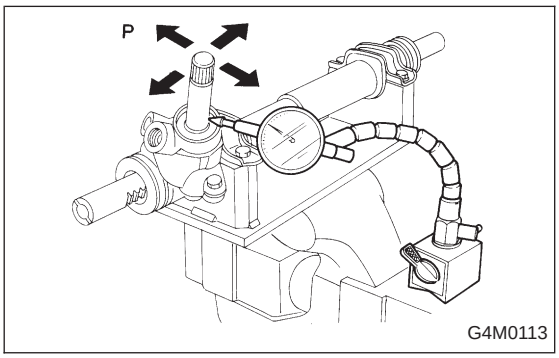

3. INPUT SHAFT PLAY

In radial direction:

Service limit
0.18 mm (0.0071 in) or less

On condition
P: 98 N (10 kg, 22 lb)

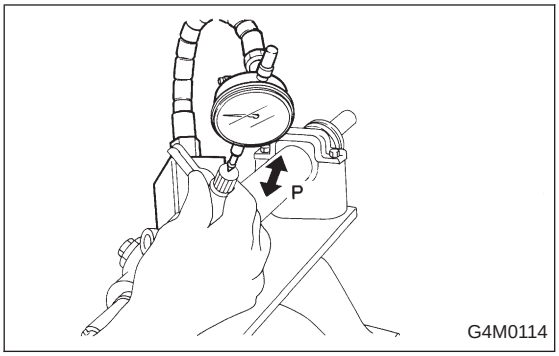

In axial direction:

Service limit

0.1 mm (0.004 in) or less

On condition

P: 20 — 49 N (2 — 5 kg, 4 — 11 lb)

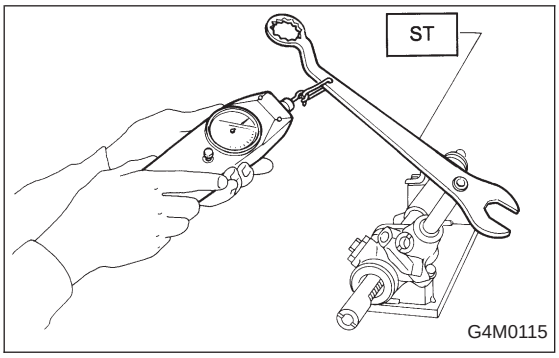

4. TURNING RESISTANCE OF GEARBOX

Using ST, measure gearbox turning resistance.

ST 926230000 SPANNER

Service limit:

Straight-ahead position within 30 mm (1.18 in) from rack center

Less than 11.18 N (1.14 kg, 2.51 lb)

Maximum allowable resistance

12.7 N (1.3 kg, 2.9 lb)

D: ASSEMBLY

CAUTION:

Use only SUBARU genuine grease for gearbox.

Specified grease for gearbox:

VALIANT GREASE M2 (Part No. 003608001)

1) Apply grease to teeth of rack so that grease applied is about as high as teeth, and also apply a thin film of grease to sliding portion of rack shaft.

CAUTION:

- **When moving rack to stroke end without tie-rod attached, prevent shocks from being applied at the end.**
- **Do not apply grease to threaded portion at end of rack shaft.**
- **Move rack shaft to stroke end two or three times to squeeze grease which accumulates on both ends. Remove grease to prevent it from choking air passage hole.**

2) Apply grease to sleeve insertion hole.
3) Apply grease to dust seal insertion hole.

CAUTION:

Apply clean grease with clean hands. If material having a sharp edge is used for applying grease, oil seal at the inside might be damaged.

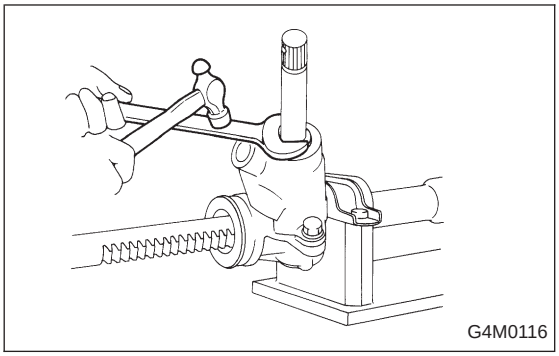

4) Press-fit dust seal into gearbox housing while tapping it via a spanner or the like so that stepping between gearbox and dust seal is normally 2 mm (0.08 in).

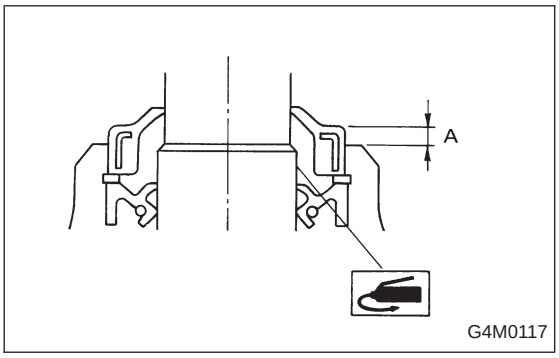

Depth: A
2 mm (0.08 in)

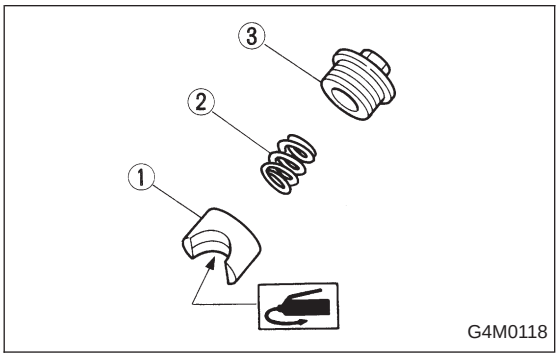

5) Apply grease to sliding surface of sleeve and spring seat, then insert sleeve into pinion housing. Fit spring into sleeve screw, pack grease inside of screw, then install the screw.

① Sleeve
② Spring
③ Adjusting screw

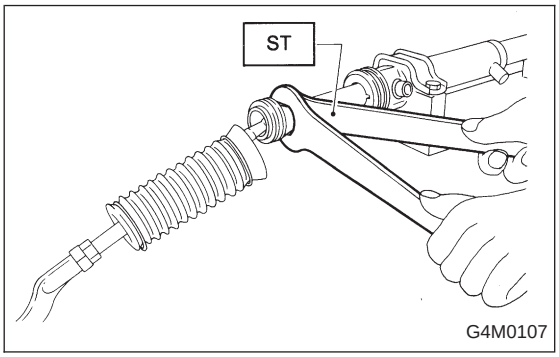

6) Fit new lock washer on screwed portion of rack end. Aligning cut portion of rack and nail of washer, screw in and tighten ball joint by using ST and spanner.

ST 925700000 WRENCH

Tightening torque (Ball joint):
78±10 N·m (8.0±1.0 kg-m, 58±7 ft-lb)

CAUTION:
Pay attention to prevent rack surface on the right side from being damaged by a tool or the like, otherwise oil leakage might be caused.

NOTE:
While tightening ball joint, hold rack with ST to prevent it from revolving.

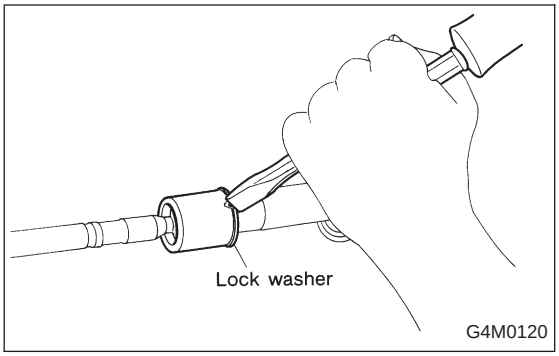

7) Bend lock washer using a chisel.

CAUTION:
Be careful not to scratch rack when bending lock washer.

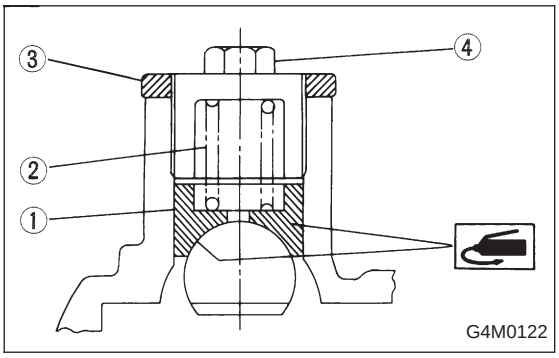

8) Rack and pinion backlash adjustment

(1) Loosen adjusting screw.
(2) Rotate input shaft so that rack is in the straight ahead direction.
(3) Apply grease to sleeve.

① Sleeve
② Spring
③ Lock nut
④ Adjusting screw

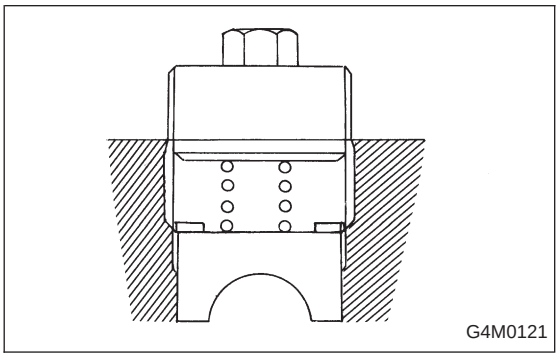

(4) Tighten adjusting screw by two threads.

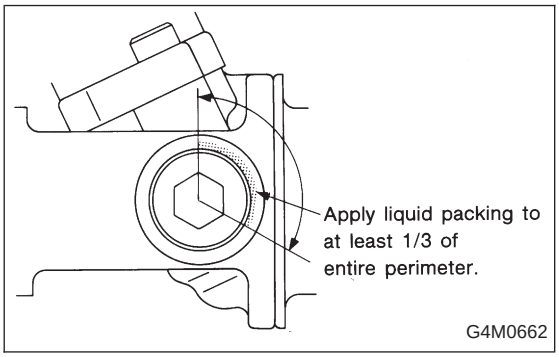

(5) Apply liquid packing to at least 1/3 of entire perimeter of adjusting screw thread.

Liquid packing:
THREE BOND 1141

(6) Tighten adjusting screw to 15 N·m (1.5 kg-m, 11 ft-lb) and back off 26°.
(7) Install lock nut. While holding adjusting screw with a wrench, tighten lock nut using ST.

ST 926230000 SPANNER

Tightening torque (Lock nut):
39±10 N·m (4.0±1.0 kg-m, 29±7 ft-lb)

NOTE:
● Hold adjusting screw with a wrench to prevent it from turning while tightening lock nut.

● Make adjustment so that steering wheel can be rotated fully from lock to lock without binding.

9) Check for service limit as per article of “Service limit”. <Ref. to 4-3 [W3C1].> Make replacement and adjustment if necessary.

10) Install boot and mounting rubber to housing.

NOTE:
Apply grease through small hole in boot.

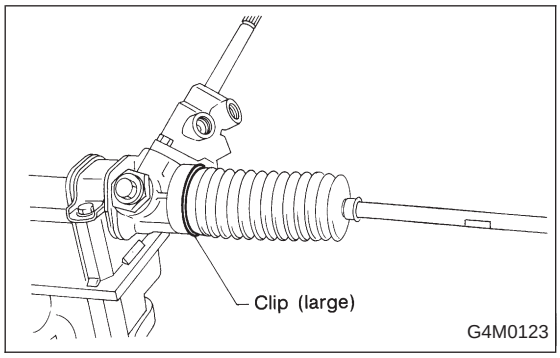

11) Fit clip (large) to boot, and then install boot to gearbox while holding boot flange.
After installing boot, fold back boot flange to the extent that large clip can not be seen.

NOTE:
● Before installing boot, be sure to apply grease to the groove of tie-rod.
● Install fitting portions of boots to the following portions in both sides of assembled steering gearbox.
1. The groove on gearbox
2. The groove on the rod
● Make sure that boot is installed without unusual inflation or deflation.

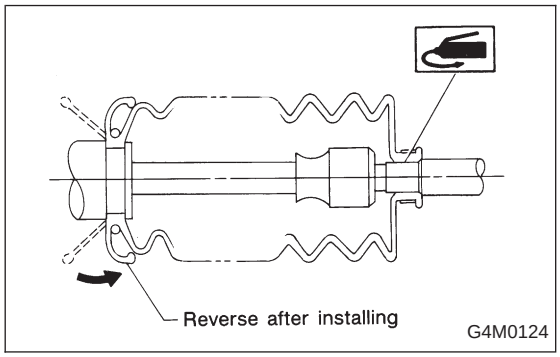

12) Turn boot until it seats well on gearbox and rubber mounting, then bend boot flange back.

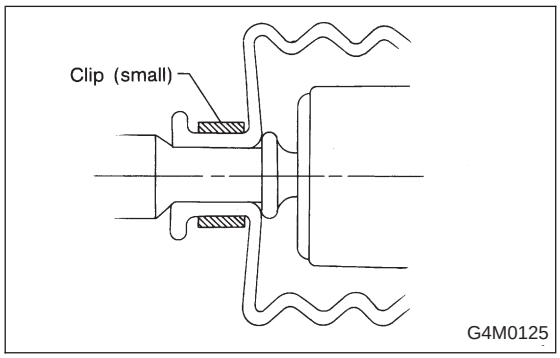

13) Fix boot end with clip (small).

CAUTION:
Use screwdriver with blunted tip to prevent boot from damage, when installing.

NOTE:
After installing, check boot end is positioned into groove on tie-rod.

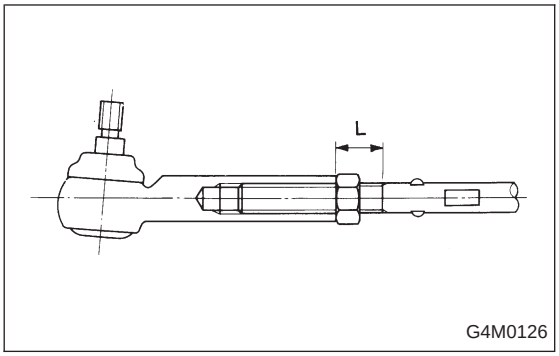

14) If tie-rod end was removed, screw in lock nut and tie-rod end to screwed portion of tie-rod, and tighten lock nut temporarily in a position as shown in figure.

Installed tie-rod length: L
15 mm (0.59 in)

NOTE:
Pay attention to difference between right and left tie-rod ends.

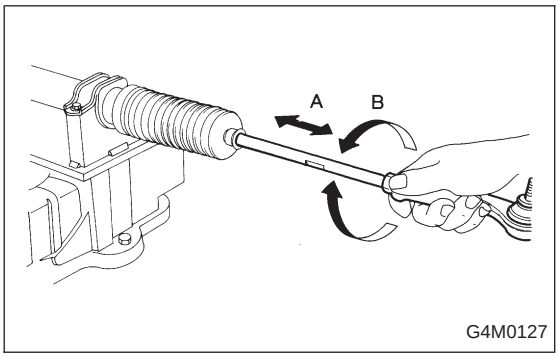

15) Inspect gearbox as follows:

A. Holding tie-rod end, repeat lock to lock two or three times as quickly as possible.

B. Holding tie-rod end, turn it slowly at a radius one or two times as large as possible.

After all, make sure that boot is installed in the specified position without deflation.

16) Remove gearbox from ST.

ST 926200000 STAND

17) Install four pipes on gearbox.

(1) Connect pipes A and B to four pipe joints of gearbox. Connect upper pipe B first, and lower pipe A.

Tightening torque:
13±3 N·m (1.3±0.3 kg-m, 9.4±2.2 ft-lb)

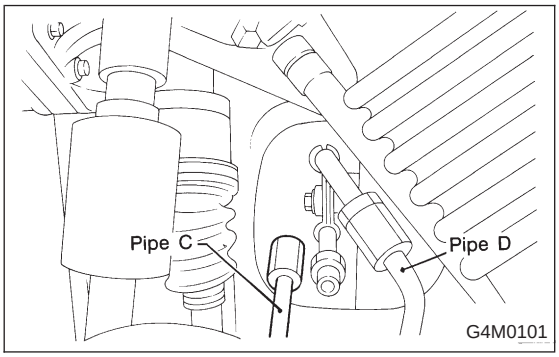

(2) Connect pipes C and D to gearbox.
Connect lower pipe C first, and upper pipe D second.

Tightening torque:
15±5 N·m (1.5±0.5 kg-m, 10.8±3.6 ft-lb)

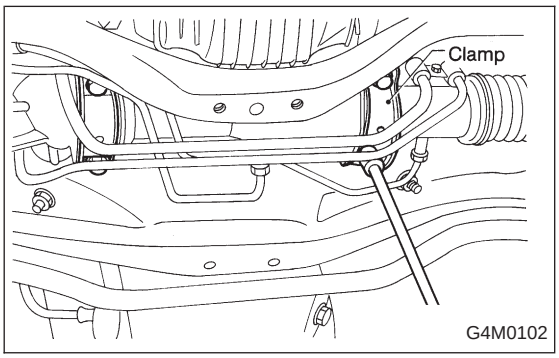

E: INSTALLATION

1) Insert gearbox into crossmember, being careful not to damage gearbox boot.

2) Tighten gearbox to crossmember bracket via clamp with bolt to the specified torque.

Tightening torque:
59±12 N·m (6.0±1.2 kg-m, 43±9 ft-lb)

3) How to install the joint.

(1) Push the long yoke of the joint, all the way into the serrated portion of the steering shaft, setting the bolt hole in the cutout.

(2) Then pull the short yoke all way out of the serrated portion of the gearbox, setting the bolt hole in the cut-out.

(3) Insert the bolt through the short yoke, pull the joint and confirm that the bolt is on cutout of the gearbox.

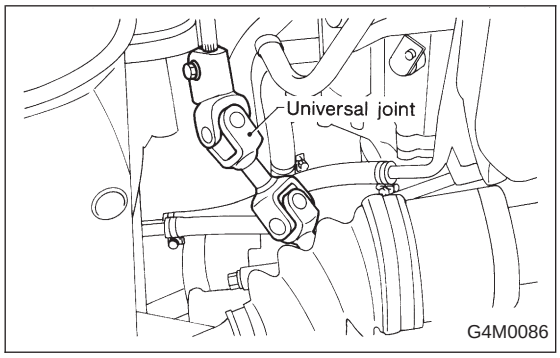

(4) Fasten the short yoke side with a spring washer and bolt, then fasten the long yoke side.

Tightening torque:
24±3 N·m (2.4±0.3 kg-m, 17.4±2.2 ft-lb)

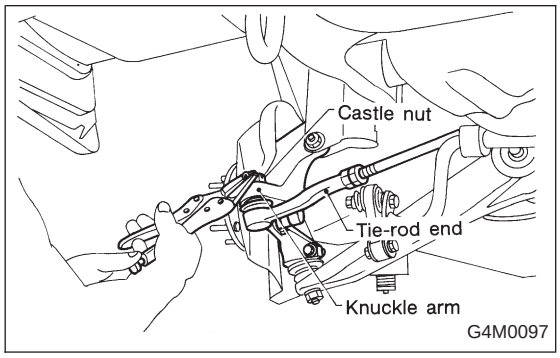

4) Connect tie-rod end and knuckle arm, and tighten with castle nut. Fit cotter pin into the nut and bend the pin to lock.

Castle nut tightening torque:
Tighten to 27.0±2.5 N·m (2.75±0.25 kg-m, 19.9±1.8 ft-lb), and tighten further within 60° until cotter pin hole is aligned with a slot in the nut.

CAUTION:
When connecting, do not hit cap at the bottom of tie-rod end with hammer.

5) Install front stabilizer to vehicle.
6) Install front exhaust pipe assembly.
<Ref. to 2-9 [W1B0].>
7) Install tires.
8) Tighten wheel nuts to the specified torque.

Tightening torque:
88±10 N·m (9.0±1.0 kg-m, 65±7 ft-lb)

9) Connect ground cable to battery.
10) Pour fluid into oil tank, and bleed air. <Ref. to 4-3 [W9A0].>
11) Check for fluid leaks.
12) Install jack-up plate.

WARNING:
Be careful, exhaust manifold is hot.

13) Lower vehicle.
14) Check fluid level in oil tank.

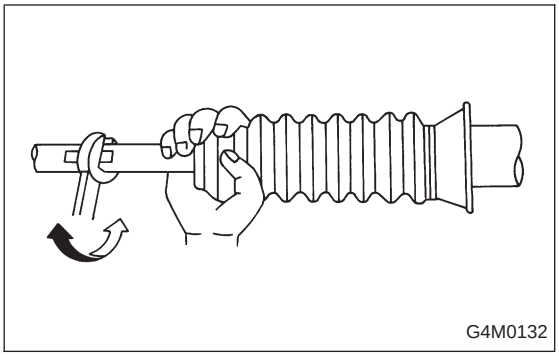

15) After adjusting toe-in and steering angle, tighten lock nut on tie-rod end.

Tightening torque:
83±5 N·m (8.5±0.5 kg-m, 61.5±3.6 ft-lb)

CAUTION:
When adjusting toe-in, hold boot as shown to prevent it from being rotated or twisted. If twisted, straighten it.

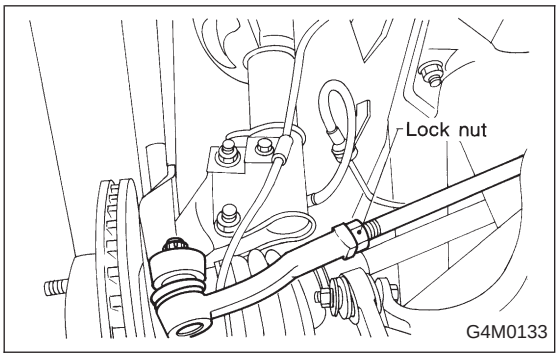

F: ADJUSTMENT

1) Adjust front toe.

Standard of front toe:
IN 3 — OUT 3 mm (IN 0.12 — OUT 0.12 in)

2) Adjust steering angle of wheels.

Inner wheel: 37.6°±1.5
Outer wheel: 32.6°±1.5

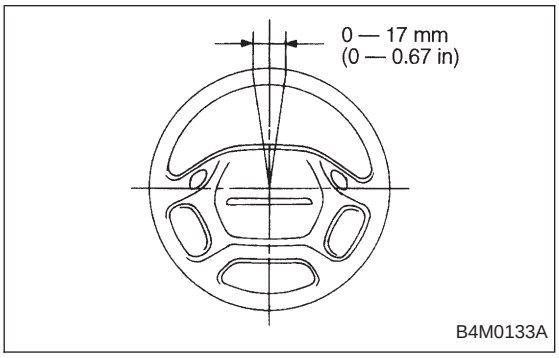

3) If steering wheel spokes are not horizontal when wheels are set in the straight ahead position, and error is more than 5° on the periphery of steering wheel, correctly re-install the steering wheel.

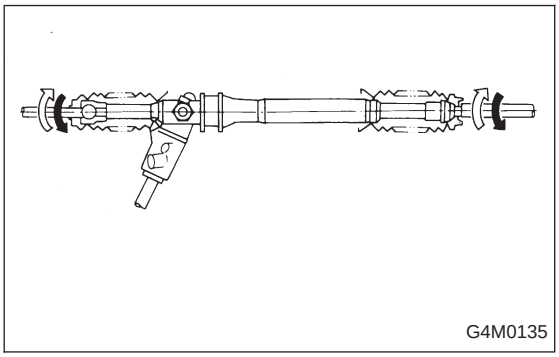

4) If steering wheel spokes are not horizontal with vehicle set in the straight ahead position after this adjustment, correct it by turning the right and left tie-rods in the same direction by the same turns.