4. Steering Gearbox (Power Steering System) [RHD model]

NOTE:
For disassembly and assembly of gearbox unit, refer to section Control Valve (Power Steering Gearbox).

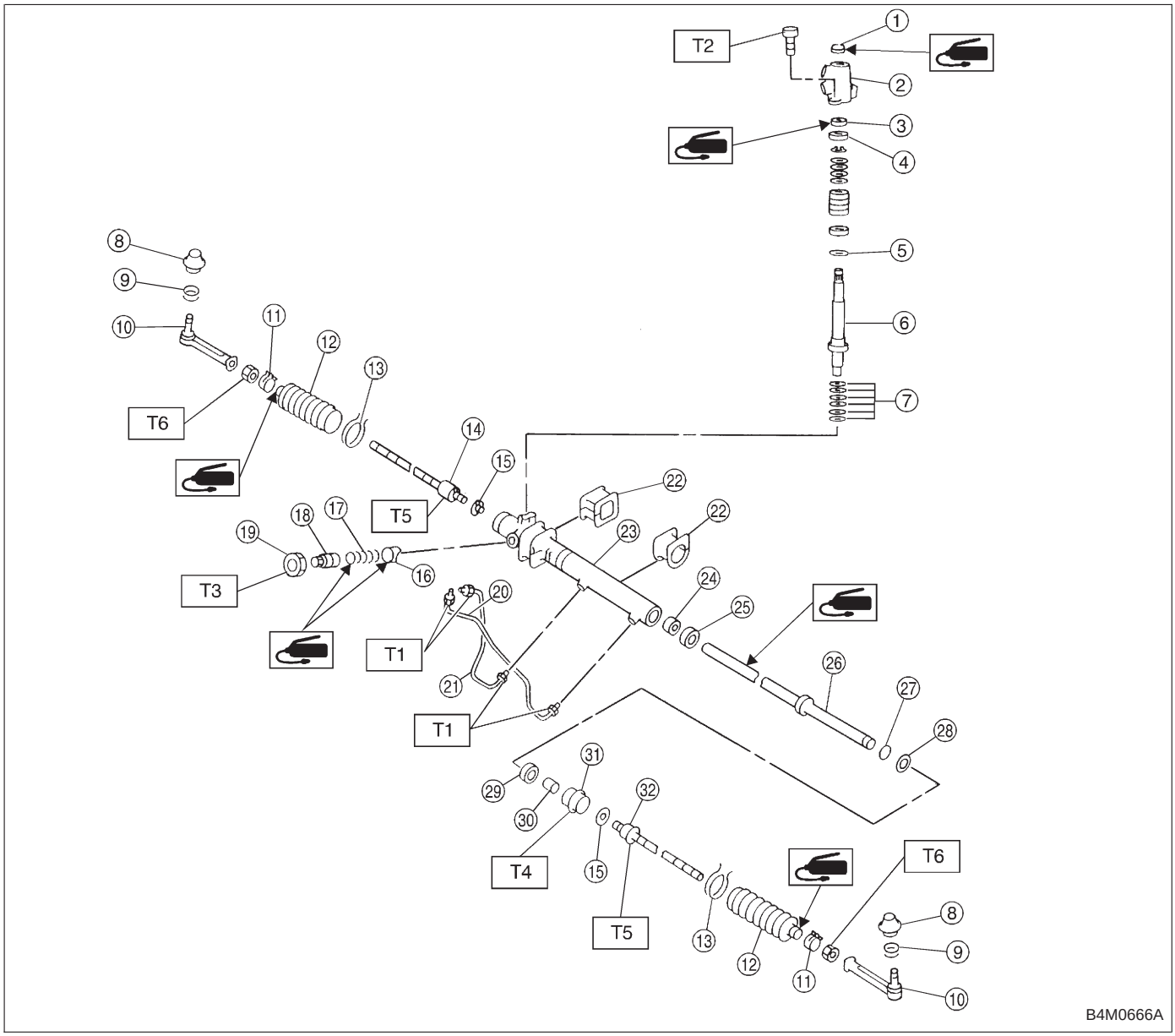

Tightening torque: N·m (kg-m, ft-lb)
T1: 20±4 (2.0±0.4, 14.5±2.9)
T2: 25±5 (2.5±0.5, 18.1±3.6)
T3: 39±10 (4.0±1.0, 29±7)
T4: 64±10 (6.5±1.0, 47±7)
T5: 78±10 (8.0±1.0, 58±7)
T6: 83±5 (8.5±0.5, 61.5±3.6)

① Dust cover
② Valve housing
③ Y-packing
④ Ball-bearing
⑤ Spacer
⑥ Pinion
⑦ Shim
⑧ Dust seal
⑨ Clip
⑩ Tie-rod end
⑪ Clip
⑫ Boot
⑬ Wire
⑭ Tie-rod RH
⑮ Lock washer
⑯ Sleeve
⑰ Spring
⑱ Adjusting screw
⑲ Lock nut
⑳ Pipe A
㉑ Pipe B
㉒ Adapter
㉓ Housing ASSY
㉔ Back-up washer
㉕ Oil seal
㉖ Rack
㉗ O-ring
㉘ Oil seal
㉙ Y-packing
㉚ Bush
㉛ Holder
㉜ Tie-rod LH

A: REMOVAL

1) Disconnect battery negative terminal.
2) Disconnect both oxygen sensor and exhaust gas temperature warning sensor connectors from front exhaust pipe assembly.

WARNING:
Be careful as exhaust pipe is hot.

3) Raise vehicle with a jack and remove front wheel.
4) Disconnect front exhaust pipe assembly.

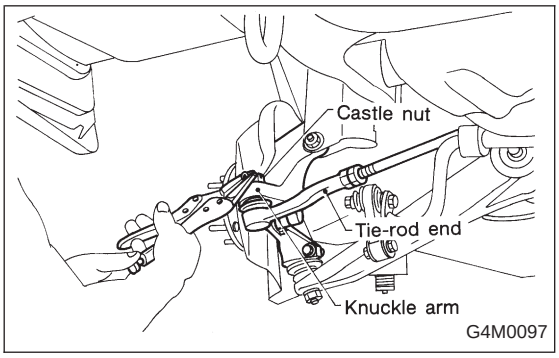

5) Remove cotter pin and castle nut. Using a puller, remove tie-rod end from knuckle arm.

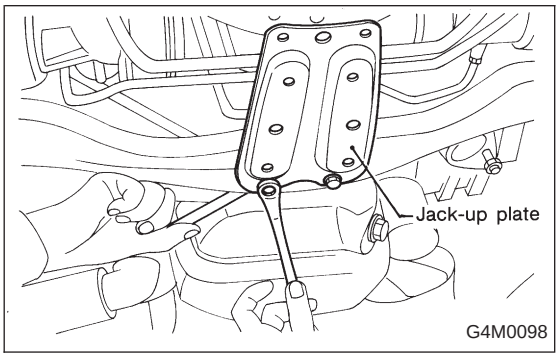

6) Remove jack-up plate and stabilizer.

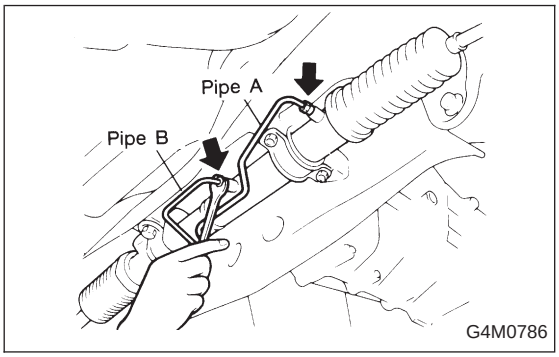

7) Disconnect one pipe joint A from center of gearbox assembly, and connect a vinyl hose to it. While turning steering wheel to the left and right, drain fluid through the hose. Similarly, drain fluid from the other pipe joint B.

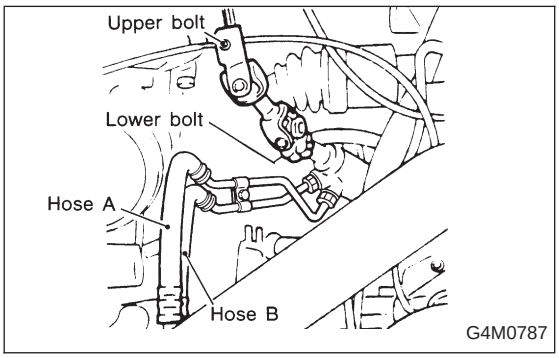

8) Remove lower and upper bolts from universal joint, and remove universal joint in the upward direction.

NOTE:
Scribe alignment marks on universal joint so that it can be reassembled at the original serration.

9) Remove flare nuts from control valve of gearbox assembly, and disconnect upper and lower hoses B and A.

CAUTION:
- **Always disconnect hoses B and A in that order.**
- **Be careful not to damage the hoses during removal.**

10) Remove bolts securing gearbox to crossmember, and detach gearbox.

B: DISASSEMBLY

1) Disconnect four pipes from gearbox.
2) Secure gearbox removed from vehicle in vice using ST.

ST 926200000 STAND

CAUTION:
Secure the gearbox assembly in a vice using the ST as shown. Do not attempt to secure it without this ST.

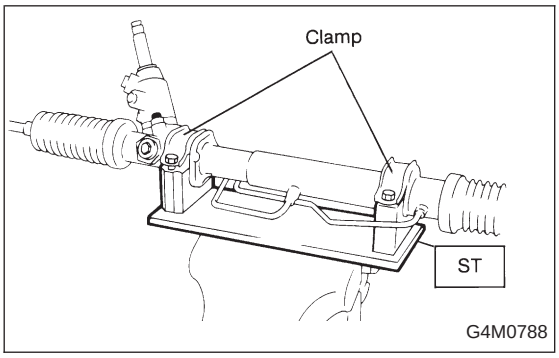

3) Pry off clip from outer end of boot, and slide boot toward tie-rod end.

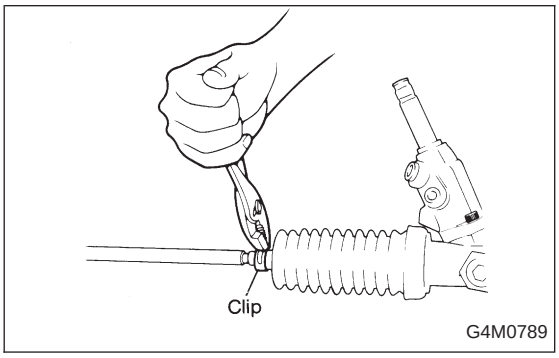

4) Using ST, remove lock wire from inner end of boot, and remove boot.

ST 927590000 WRENCH

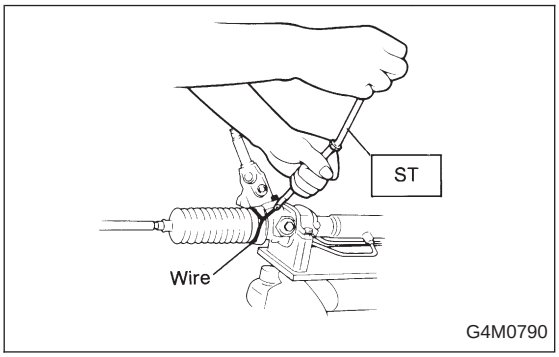

5) Extend rack approximately 40 mm (1.57 in) out. Unlock lock wire at lock washer on each side of tie-rod end using a standard screwdriver.

CAUTION:
Be careful not to scratch rack surface as oil leaks may result.

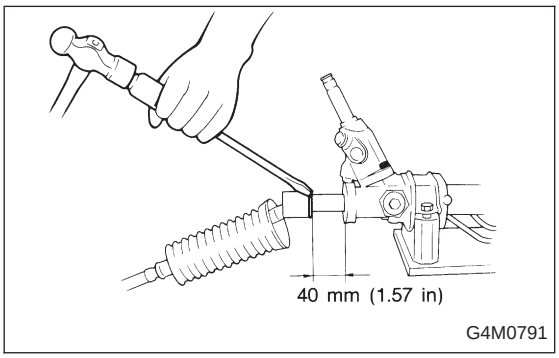

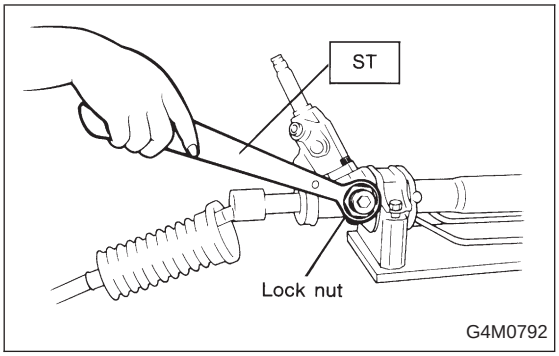

6) Using ST, loosen lock nut.

ST 926230000 SPANNER

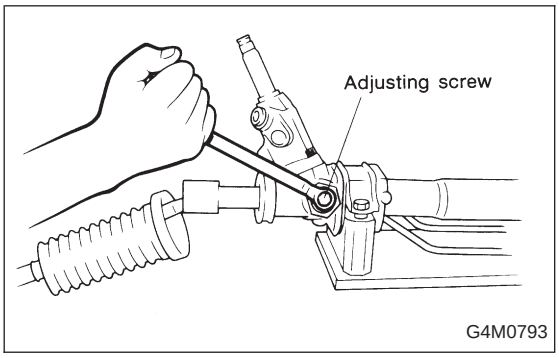

7) Tighten adjusting screw until it no longer tightens.

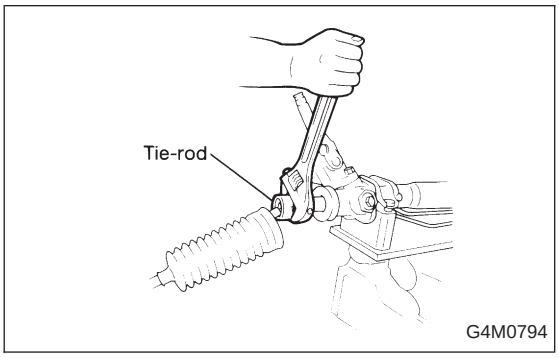

8) Using a wrench [32 mm (1.26 in) width across flats] or adjustable wrench, remove tie-rod.

CAUTION:

- **Check ball joint for free play, and tie-rod for bends. Replace if necessary.**
- **Check dust seals used with tie-rod end ball joint for damage or deterioration. Replace if necessary.**

9) Loosen adjusting screw and remove spring and sleeve.

CAUTION:

Replace spring and/or sleeve if damaged.

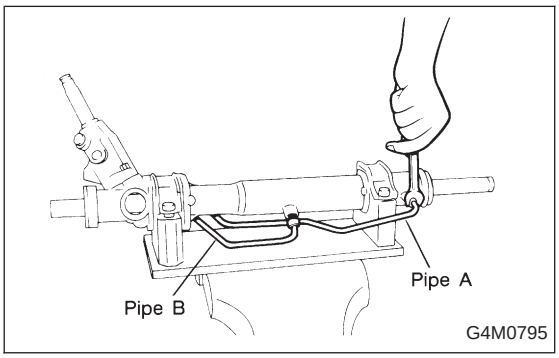

10) Disconnect pipes A and B from steering body and control valve housing.

CAUTION:

Replace pipes and/or flare nuts if damaged.

C: INSPECTION

1) Clean all disassembled parts, and check for wear, damage, or any other faults, then repair or replace as necessary.
2) When disassembling, check inside of gearbox for water. If any water is found, carefully check boot for damage, input shaft dust seal, adjusting screw and boot clips for poor sealing. If faulty, replace with new parts.

No.	Parts	Inspection	Corrective action
1	Input shaft	(1) Bend of input shaft (2) Damage on serration	If bend or damage is excessive, replace entire gearbox.
2	Dust seal	(1) Crack or damage (2) Wear	If outer wall slips, lip is worn out or damage is found, replace it with new one.
3	Rack and pinion	Poor mating of rack with pinion	(1) Adjust backlash properly. By measuring turning torque of gearbox and sliding resistance of rack, check if rack and pinion engage uniformly and smoothly with each other. (Refer to “Service limit”.) (2) Keeping rack pulled out all the way so that all teeth emerge, check teeth for damage. Even if abnormality is found in either (1) or (2), replace entire gearbox.
4	Gearbox unit	(1) Bend of rack shaft (2) Bend of cylinder portion (3) Crack or damage on cast iron portion	Replace gearbox with new one.
		(4) Wear or damage on rack bush	If free play of rack shaft in radial direction is out of the specified range, replace gearbox with new one. (Refer to “Service limit”.)
		(5) Wear on input shaft bearing	If free plays of input shaft in radial and axial directions are out of the specified ranges, replace gearbox with new one. (Refer to “Service limit”.)
5	Boot	Crack, damage or deterioration	Replace.
6	Tie-rod	(1) Looseness of ball joint (2) Bend of tie-rod	Replace.
7	Tie-rod end	Damage or deterioration on dust seal	Replace.
8	Adjusting screw spring	Deterioration	Replace.
9	Boot clip	Deterioration	Replace.
10	Sleeve	Damage	Replace.
11	Pipes	(1) Damage to flared surface (2) Damage to flare nut (3) Damage to pipe (4) Damage to O-ring	Replace.

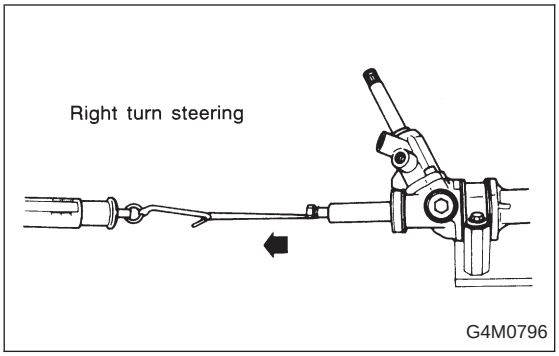

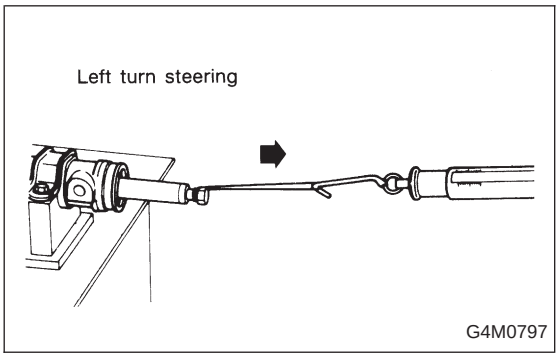

1. SERVICE LIMIT

Make a measurement as shown in the figures. If it exceeds the specified service limit, adjust or replace.

NOTE:
When making a measurement, vise gearbox by using ST. Never vise gearbox by inserting aluminum plates, etc. between vise and gearbox.

ST 926200000 STAND

Sliding resistance of rack shaft:

Service limit
304 N (31 kg, 68 lb) or less

Difference between left and right sliding resistance
Less than 20%

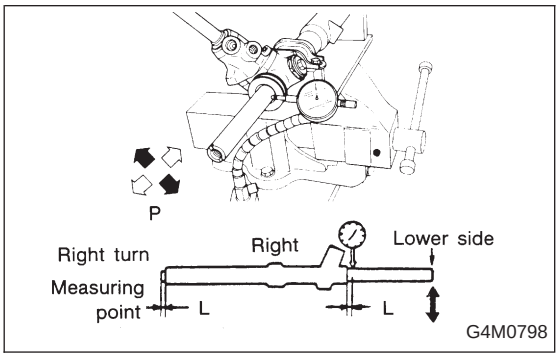

2. RACK SHAFT PLAY IN RADIAL DIRECTION

Right-turn steering:

Service limit
Less than 0.4 mm (0.016 in) (direction ⬅ ➡)
Less than 0.6 mm (0.024 in) (direction ⇦ ⇨)

On condition
L: 5 mm (0.20 in)
P: 98 N (10 kg, 22 lb)

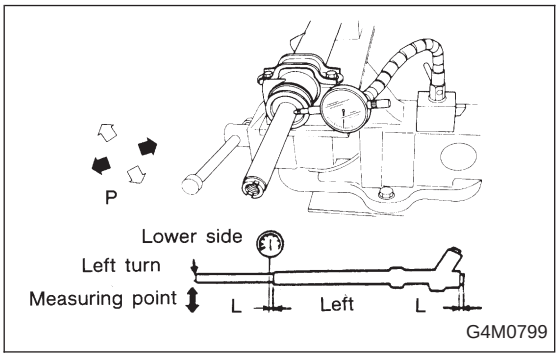

Left-turn steering:

Service limit
Less than 0.4 mm (0.016 in)
(direction ⬅ ➡ and ⇦ ⇨)

On condition
L: 5 mm (0.20 in)
P: 98 N (10 kg, 22 lb)

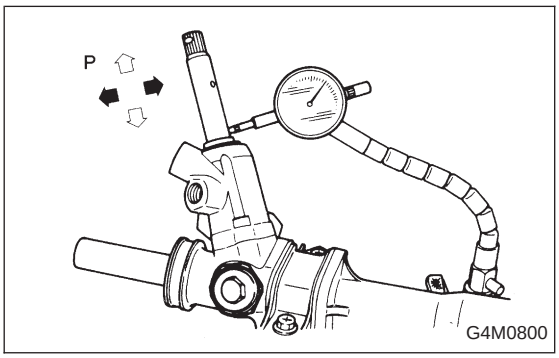

3. INPUT SHAFT PLAY

In radial direction:

Service limit
0.18 mm (0.0071 in) or less

On condition
P: 98 N (10 kg, 22 lb)

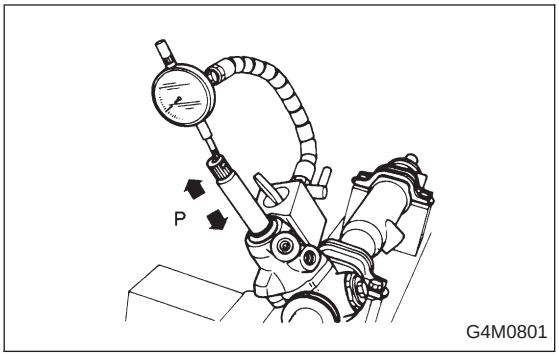

In axial direction:

Service limit
0.27 mm (0.0106 in) or less

On condition
P: 20 — 49 N (2 — 5 kg, 4 — 11 lb)

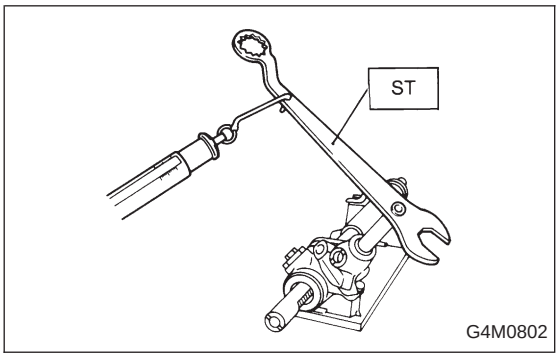

4. TURNING RESISTANCE OF GEARBOX

Using ST, measure gearbox turning resistance.
ST 926230000 SPANNER

Service limit:
Straight-ahead position within 30 mm (1.18 in) from rack center
Less than 11.18 N (1.14 kg, 2.51 lb)
Maximum allowable resistance
15.79 N (1.61 kg, 3.55 lb) or less

Difference between left and right sliding resistance:
Less than 20%

D: ASSEMBLY

CAUTION:
Use only SUBARU genuine grease for gearbox.

Specified grease for gearbox:
VALIANT GREASE M2 (Part No. 003608001)

1) Clean all parts and tools before reassembling.
2) Move rack shaft fully to the left and right two or three times to lubricate shaft ends with grease. Remove excess grease, being careful not to block air vent hole.

CAUTION:
- **When rack is fully moved to its stroke ends with tie-rod removed, be careful not to bump rack ends.**
- **Ensure that screw located at end of rack shaft is free from grease.**

3) Apply grease to bore wall which accommodates sleeve.

CAUTION:
Ensure that hands are clean when applying grease.

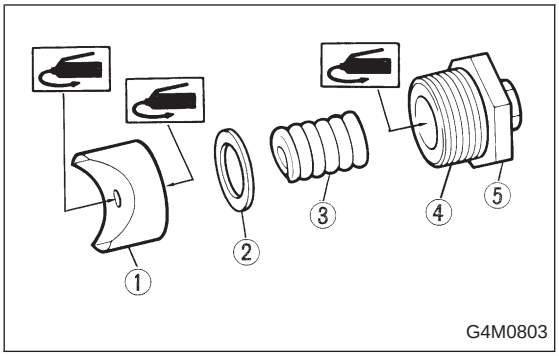

4) Apply a coat of grease to sliding surface of sleeve and seating surface of spring, and insert sleeve into steering body. Charge adjusting screw with grease, insert spring into adjusting screw and install on steering body.

① Sleeve
② Seat
③ Spring
④ Adjusting screw
⑤ Lock nut

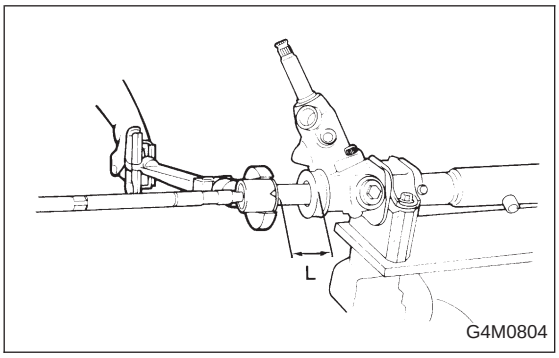

5) Installation of tie-rod

(1) Tighten adjusting screw until it will no longer tighten.
(2) Install lock washers and tighten left and right tie-rods into rack ends.

On condition
L: Approximately 40 mm (1.57 in)

Tightening torque:
78±10 N·m (8.0±1.0 kg-m, 58±7 ft-lb)

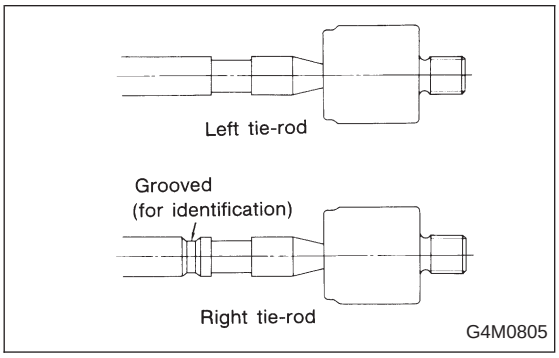

(3) The left and right tie-rod differ as indicated in the table below.

Right tie-rod (pinion side)	No air vent hole provided.	Grooved. (for identification)
Left tie-rod (cylinder side)	Air vent hole provided.	Not grooved. (for identification)

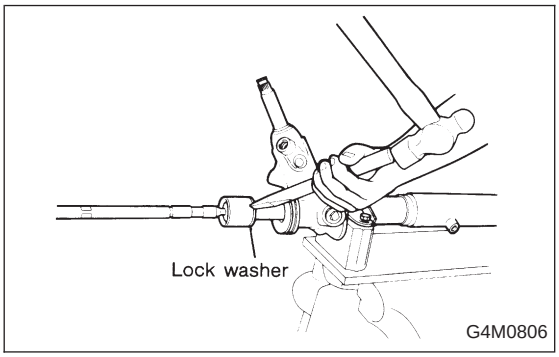

6) Using a chisel and hammer, bend lock washers (at two places).

CAUTION:
Be careful not to scratch rack.

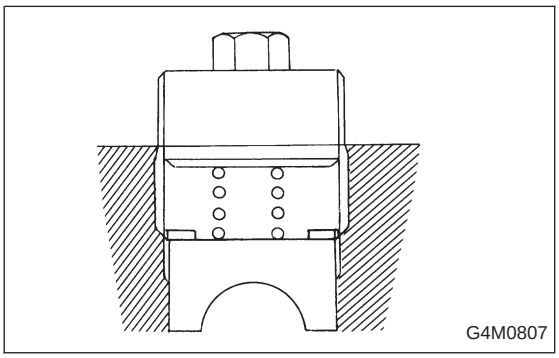

7) Rack and pinion backlash adjustment

(1) Loosen adjusting screw three to four turns.
(2) Rotate input shaft so that rack is in the straight ahead direction. [Ensure that distance between rack end and stopper is 70.8 mm (2.787 in).]
(3) Tighten adjusting screw by two threads.

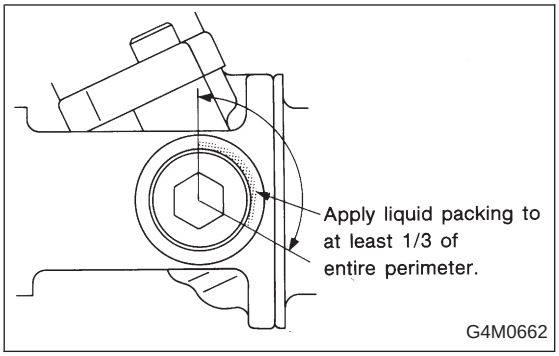

(4) Turn adjusting screw so that the entire thread area is coated with liquid packing.

Liquid packing:
THREE BOND 1102 or equivalent

NOTE:
- Apply liquid packing of approximately 1.5 grams (0.053 oz) to adjusting screw thread area.
- Also turn plug to ensure that its entire contact area is coated with liquid packing.

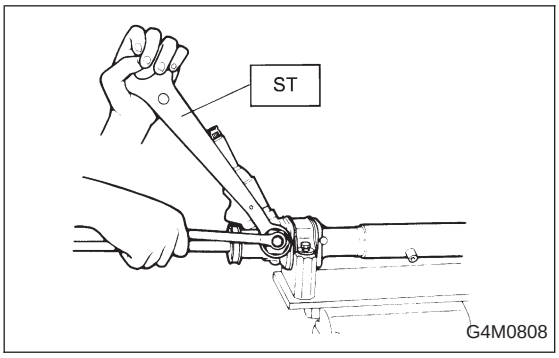

(5) Tighten adjusting plug to 5 N·m (0.5 kg-m, 3.6 ft-lb) and loosen, then tighten to 5 N·m (0.5 kg-m, 3.6 ft-lb) and loosen, and finally tighten to 5 N·m (0.5 kg-m, 3.6 ft-lb) and loosen 26°.

(6) While holding adjusting plug using a closed wrench, tighten lock nut using ST.

ST 926300000 SPANNER

Tightening torque:
39±10 N·m (4±1 kg-m, 29±7 ft-lb)

CAUTION:
- **Do not allow liquid packing to come in contact with sleeve.**
- **While rotating input shaft to fully move rack shaft to the left and right, ensure that rack moves smoothly without binding, and that rotating torque is constant.**

8) Installation of boot

(1) Apply a coat of grease to inner wall of boot small end.

(2) Position boot large end in rubber mount groove and gearbox, and small end in groove of tie-rod.

CAUTION:
- **Ensure that both ends of boot are properly situated in grooves.**
- **Ensure that boot is free from abnormal swelling or dents.**

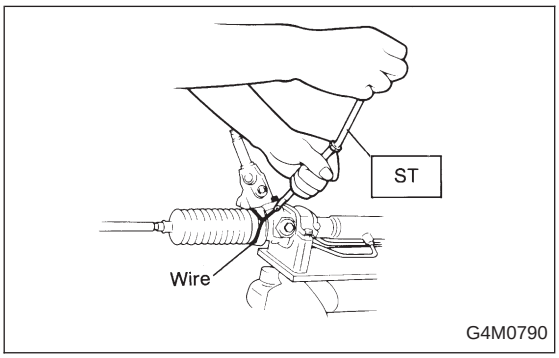

9) Attach lock wire to boot large end, and twist it while pulling it upward with a force of approximately 39±10 N (4±1 kg, 9±2 lb).

ST 927590000 WRENCH

CAUTION:
Ensure that lock wire is not loose.

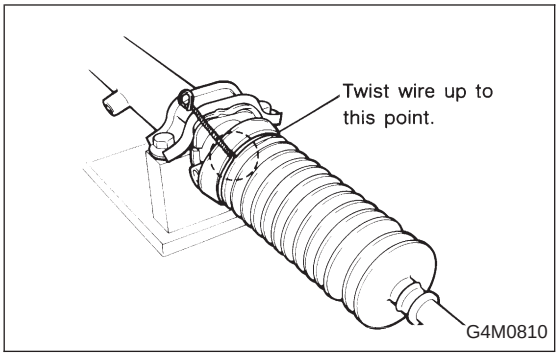

10) Then bend wire end along boot as shown.

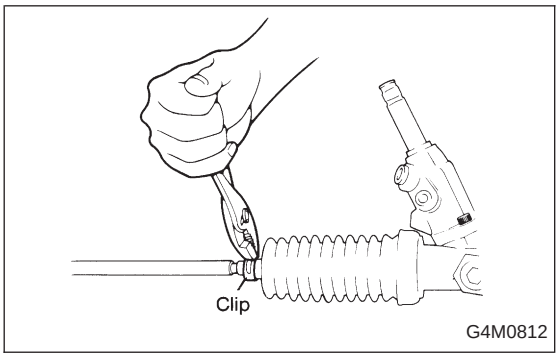

11) Install clip using pliers.

CAUTION:
After installing clip, ensure that boot's small end is properly positioned in groove on tie-rod.

12) Install pipes A and B.

Tightening torque:
20±4 N·m (2.0±0.4 kg-m, 14.5±2.9 ft-lb)

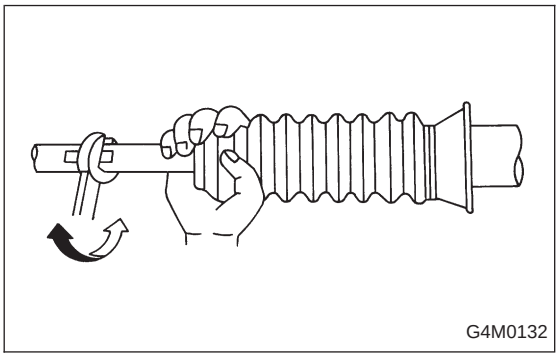

E: INSTALLATION

Installation is in the reverse order of removal.
Do the following:

CAUTION:
When adjusting toe-in, hold boot as shown to prevent it from being rotated or twisted. If twisted, straighten it.

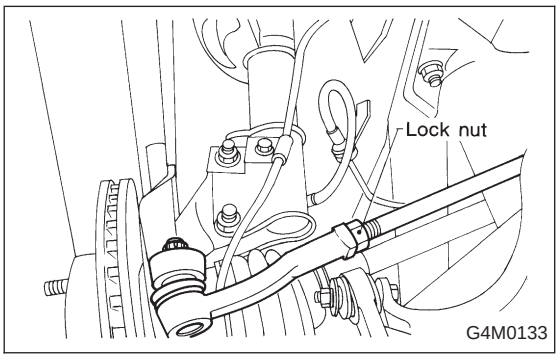

F: ADJUSTMENT

1) Adjust front toe.

Standard of front toe:
IN 3 — OUT 3 mm (IN 0.12 — OUT 0.12 in)

2) Adjust steering angle of wheels.

Standard of steering angle:
Inner wheel 37.6°±1.5°
Outer wheel 32.6°±1.5°

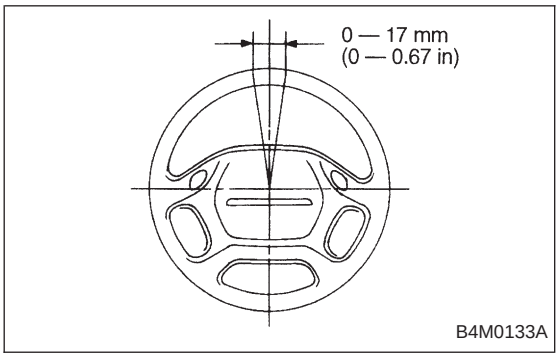

3) If steering wheel spokes are not horizontal when wheels are set in the straight ahead position, and error is more than 5° on the periphery of steering wheel, correctly re-install the steering wheel.

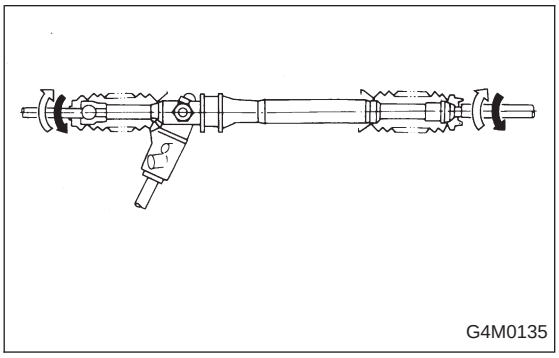

4) If steering wheel spokes are not horizontal with vehicle set in the straight ahead position after this adjustment, correct it by turning the right and left tie-rods in the same direction by the same amount.