1. Supplemental Restraint System “Airbag” AIRBAG

Airbag system wiring harness is routed near the steering wheel, steering shaft and column.

WARNING:
- **All Airbag system wiring harness and connectors are colored yellow. Do not use electrical test equipment on these circuit.**
- **Be careful not to damage Airbag system wiring harness when servicing the steering wheel, steering shaft and column.**

2. Tilt Steering Column

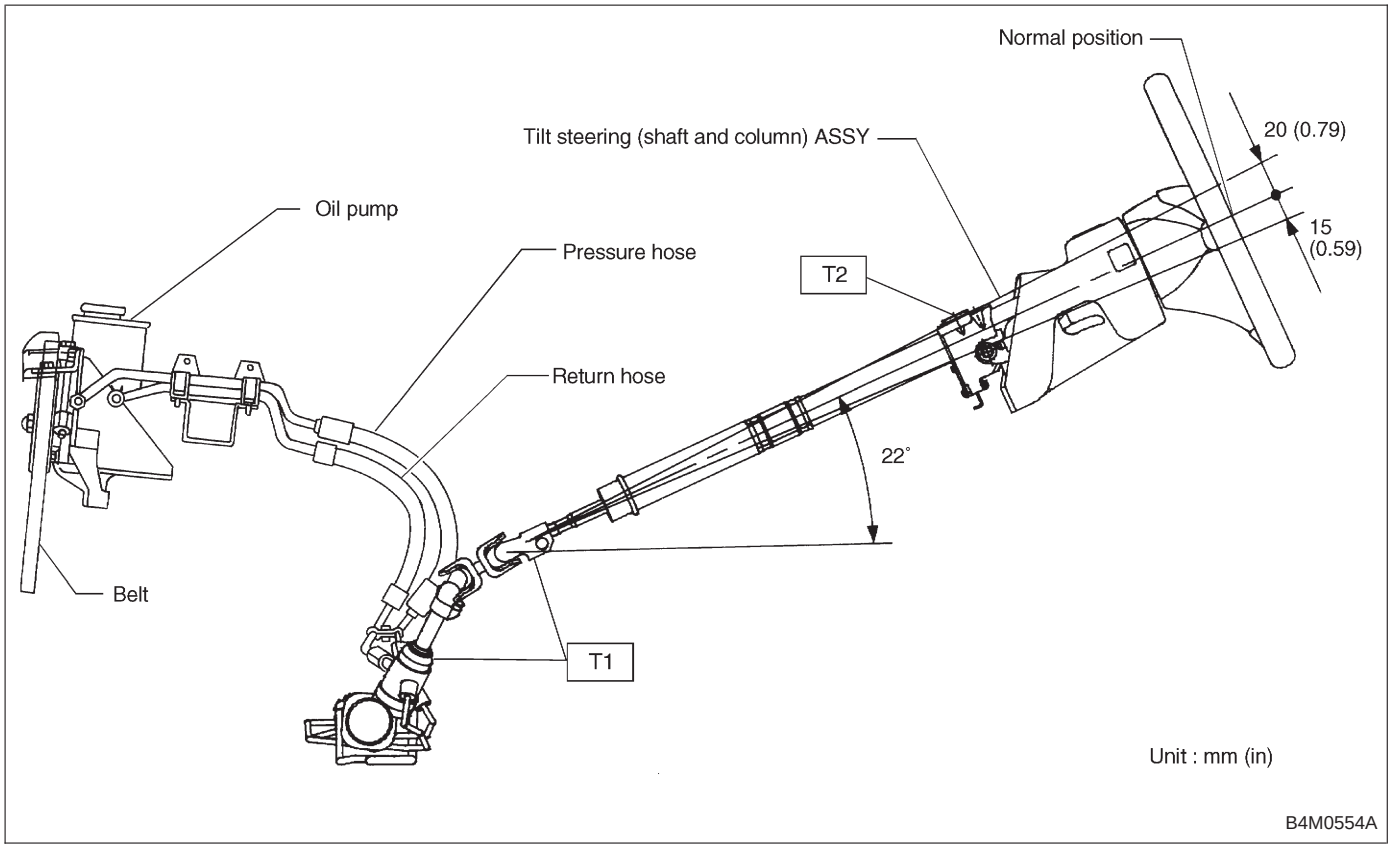

Tightening torque: N·m (kg-m, ft-lb)
T1: 24±3 (2.4±0.3, 17.4±2.2)
T2: 25±5 (2.5±0.5, 18.1±3.6)

A: REMOVAL

1) Disconnect battery minus terminal.
2) Lift-up vehicle.
3) Remove airbag module. (with airbag model) <Ref. to 5-5 [W3A1].>

WARNING:
Always refer to “5-5 Supplemental Restraint System” before performing airbag module service (if so equipped).