1. Supplemental Restraint System “Airbag” AIRBAG

Airbag system wiring harness is routed near the steering wheel, steering shaft and column.

WARNING:
- **All Airbag system wiring harness and connectors are colored yellow. Do not use electrical test equipment on these circuit.**
- **Be careful not to damage Airbag system wiring harness when servicing the steering wheel, steering shaft and column.**

2. Tilt Steering Column

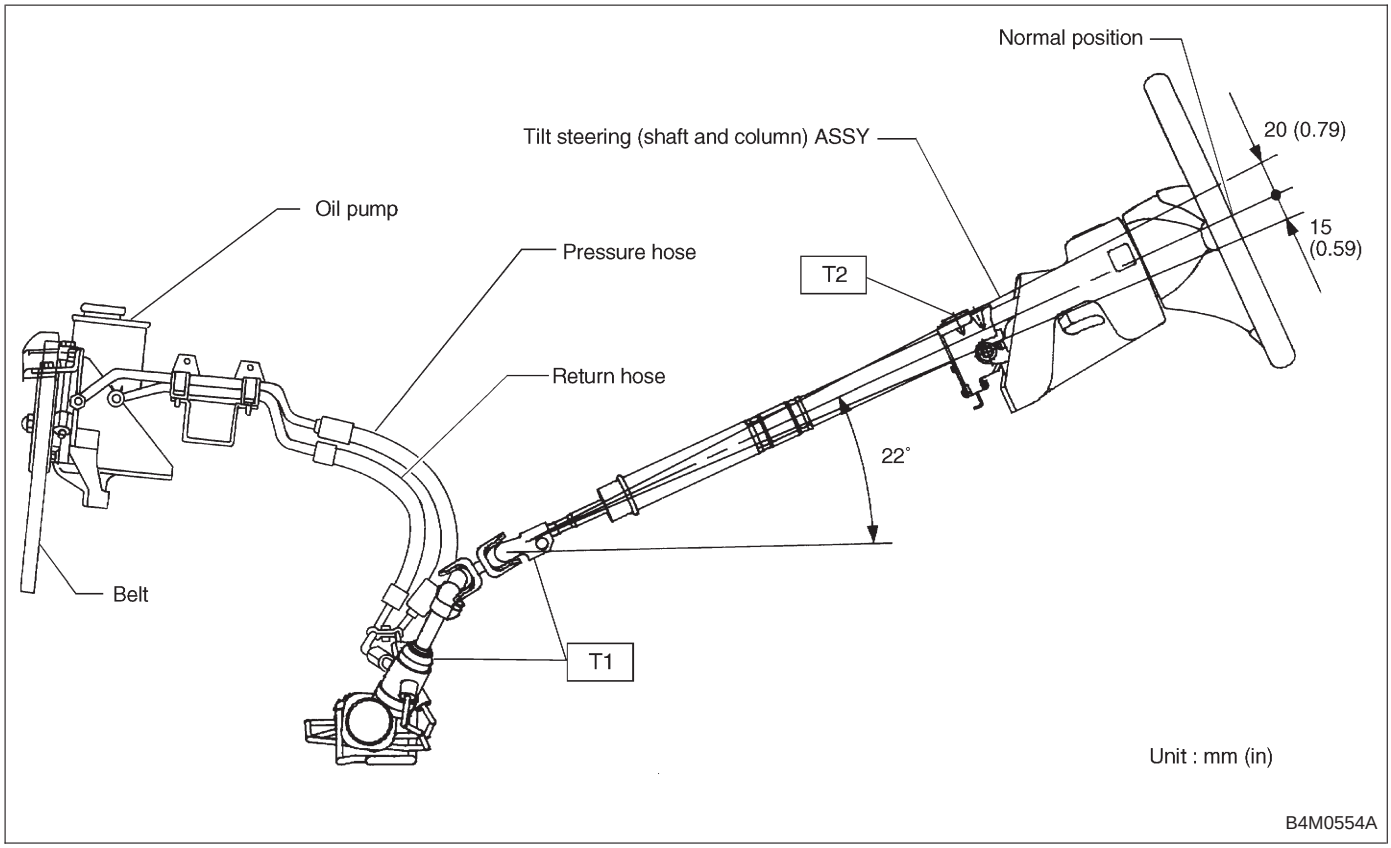

Tightening torque: N·m (kg-m, ft-lb)
T1: 24±3 (2.4±0.3, 17.4±2.2)
T2: 25±5 (2.5±0.5, 18.1±3.6)

A: REMOVAL

1) Disconnect battery minus terminal.
2) Lift-up vehicle.
3) Remove airbag module. (with airbag model) <Ref. to 5-5 [W3A1].>

WARNING:
Always refer to “5-5 Supplemental Restraint System” before performing airbag module service (if so equipped).

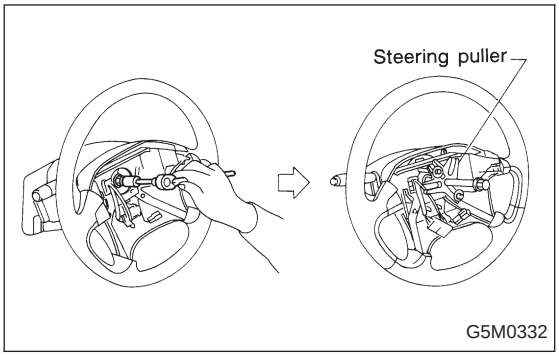

4) Remove steering wheel nut, then draw out steering wheel from shaft using steering puller.

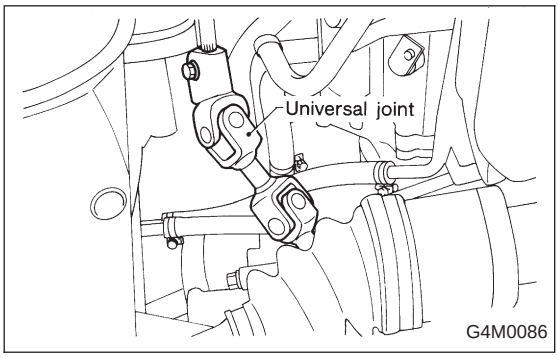

5) Remove universal joint bolts and then remove universal joint.

CAUTION:
Scribe alignment marks on universal joint so that it can be reassembled at the original serration.

6) Remove trim panel under instrument panel.
7) Disconnect connectors for ignition switch and combination switch wiring harness under instrument panel.

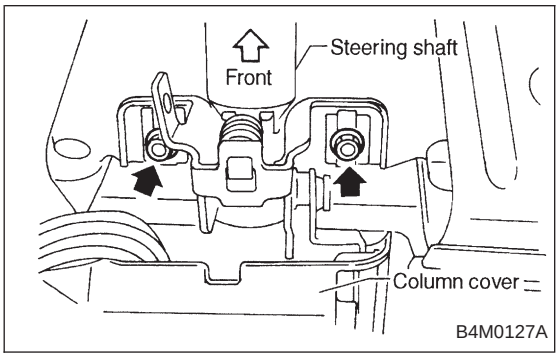

8) Remove the two bolts under instrument panel securing steering shaft.
9) Pull out steering shaft assembly from hole on toe board.

CAUTION:
Be sure to remove universal joint before removing steering shaft assembly installing bolts when removing steering shaft assembly or when lowering it for servicing of other parts.

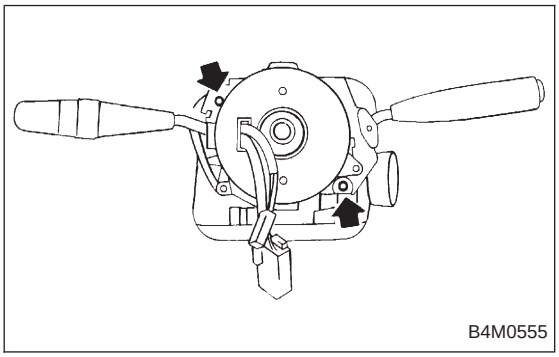

B: DISASSEMBLY

Remove the four screws securing upper and lower steering column covers, and the two screws securing combination switch, then remove related parts.

NOTE:
Steering column assembly can not to be disassembled.

C: INSPECTION

1. BASIC INSPECTION

Clean the disassembled parts with a cloth, and check for wear, damage, or any other faults. If necessary, repair or replace faulty parts.

Part name	Inspection	Corrective action
Universal joint	● Free play ● Swinging torque ● Yawing torque looseness 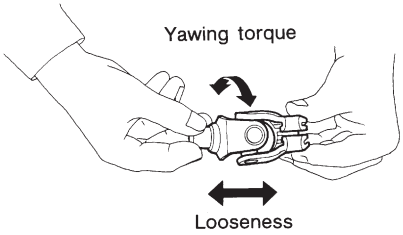 G4M0089 **Standard value of universal joint free play: 0 mm (0 in)** **Max. value of universal joint swinging torque:** **0.3 N·m (0.03 kg-m, 0.2 ft-lb)**	Replace if faulty.
Steering column	● Overall length of steering column Measure overall length of steering column. Standard overall length of steering column: 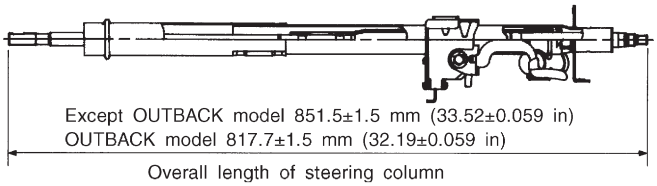 B4M0129C	Replace steering column assembly.

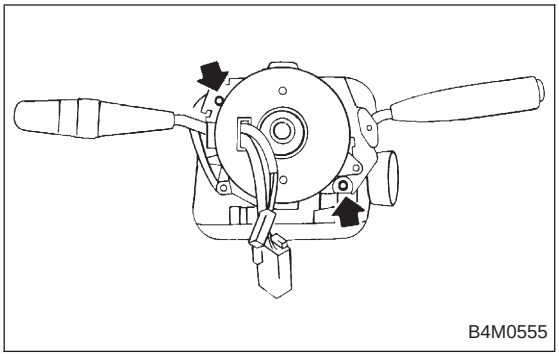

D: ASSEMBLY

1) Insert combination switch to upper column shaft, and install lower column cover with tilt lever held in the lowered position. Then route ignition key harness and combination switch harness between column cover mounting bosses.
2) Fit upper column cover to lower column cover, and tighten combination switch and column cover.

Tightening torque:
1.2±0.2 N·m (0.12±0.02 kg-m, 0.9±0.1 ft-lb)

CAUTION:
Don't overtorque screw.

E: INSTALLATION

1) Insert end of steering shaft into toe board grommet.
2) Tighten steering shaft mounting bolts under instrument panel.

Tightening torque:
25±5 N·m (2.5±0.5 kg-m, 18.1±3.6 ft-lb)

3) Connect ignition and combination switch connectors under instrument panel.
4) Connect airbag system connector at harness spool.

NOTE:
Make sure to apply double lock.

5) Install universal joint.
   (1) Align bolt hole on the long yoke side of universal joint with the cutout at the serrated section of shaft end, and insert universal joint.
   (2) Align bolt hole on the short yoke side of universal joint with the cutout at the serrated section of gearbox assembly. Lower universal joint completely.
   (3) Temporarily tighten bolt on the short yoke side. Raise universal joint to make sure the bolt is properly passing through the cutout at the serrated section.
   (4) Tighten bolt on the long yoke side, then that on the short yoke side.

Tightening torque:
24±3 N·m (2.4±0.3 kg-m, 17.4±2.2 ft-lb)

CAUTION:
- **Make sure that universal joint bolts is tightened through notch in shaft serration.**
- **Excessively large tightening torque of universal joint bolts may lead to heavy steering wheel operation.**

Standard clearance between gearbox to DOJ:
Over 15 mm (0.59 in)

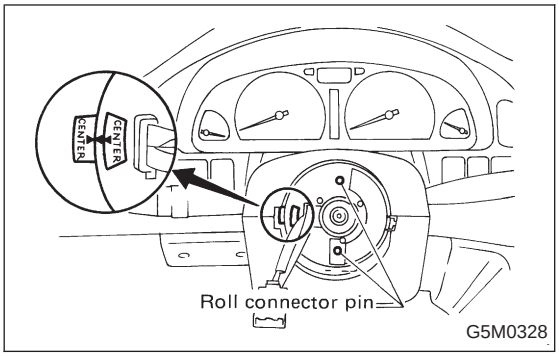

6) Align center of roll connector. (with airbag model) <Ref. to 5-5 [W7B1].>

CAUTION:
Ensure that front wheels are set in straight-forward direction.

7) Set steering wheel to neutral and install it onto steering shaft.

Tightening torque:
34±5 N·m (3.5±0.5 kg-m, 25.3±3.6 ft-lb)

Column cover-to-steering wheel clearance:
2 — 4 mm (0.08 — 0.16 in)

CAUTION:
Insert roll connector guide pin into guide hole on lower end of surface of steering wheel to prevent damage.
Draw out airbag system connector, horn connector and cruise control connectors from guide hole of steering wheel lower end. (with airbag model)

8) Install airbag module to steering wheel. (with airbag model)

WARNING:
Always refer to 5-5 [W7B1] before performing the service operation.