1. Conventional Suspension

1. FRONT SUSPENSION

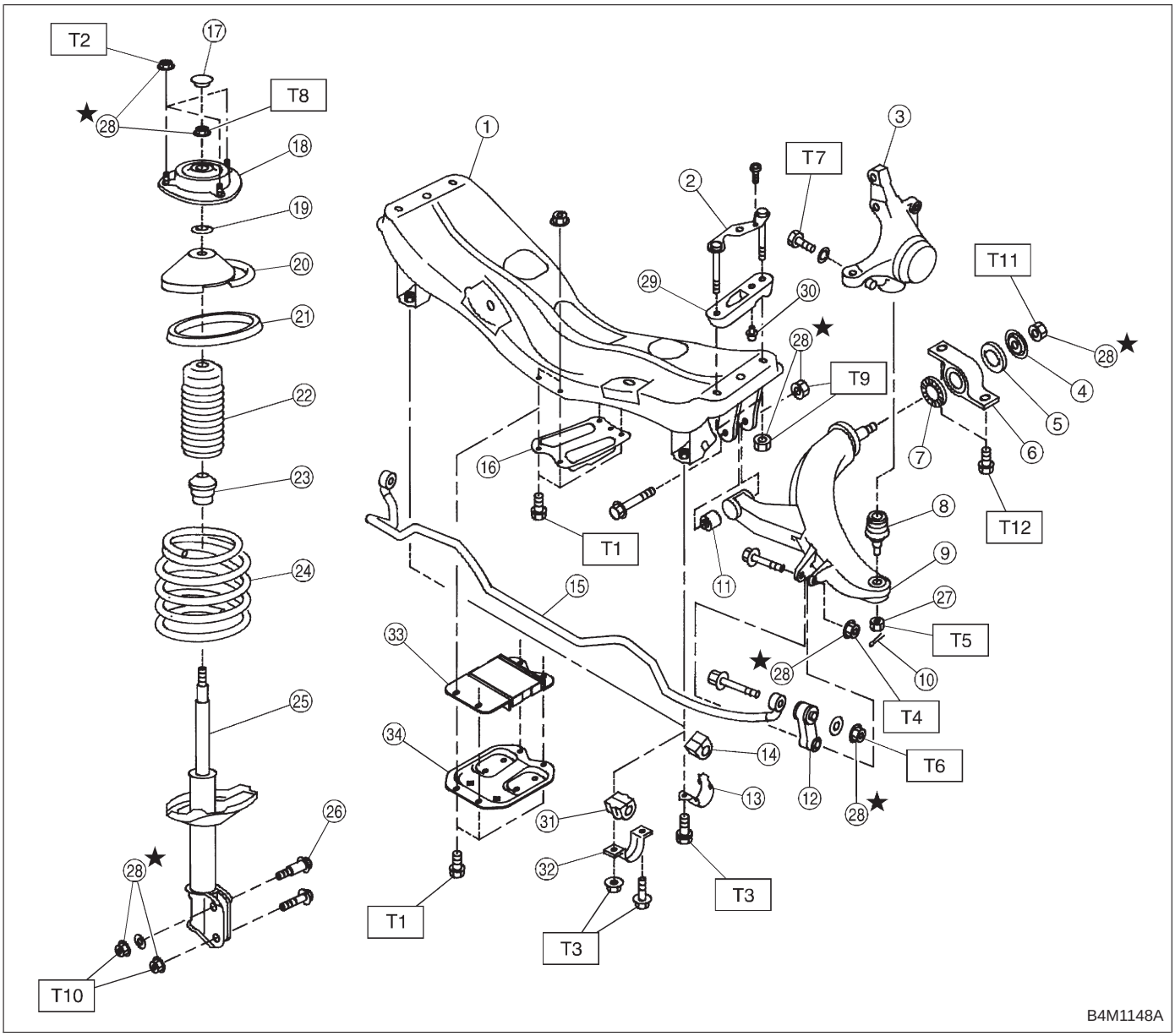

1. Front crossmember
2. Bolt ASSY
3. Housing
4. Washer
5. Stopper rubber (Rear)
6. Rear bushing
7. Stopper rubber (Front)
8. Ball joint
9. Transverse link
10. Cotter pin
11. Front bushing
12. Stabilizer link
13. Clamp (2200 cc model)
14. Bushing (2200 cc model)
15. Stabilizer
16. Jack-up plate (Except 2500 cc MT model)
17. Dust seal
18. Strut mount
19. Spacer
20. Upper spring seat
21. Rubber seat
22. Dust cover
23. Helper
24. Coil spring
25. Damper strut
26. Adjusting bolt
27. Castle nut
28. Self-locking nut
29. Adapter front crossmember (OUTBACK model)
30. Clip (OUTBACK model)
31. Bushing (2500 cc model)
32. Clamp (2500 cc model)
33. Dynamic damper (2500 cc MT model)
34. Jack-up plate (2500 cc MT model)

Tightening torque: N·m (kg-m, ft-lb)
T1: 18±5 (1.8±0.5, 13.0±3.6)
T2: 20±6 (2.0±0.6, 14.5±4.3)
T3: 25±4 (2.5±0.4, 18.1±2.9)
T4: 29±5 (3.0±0.5, 21.7±3.6)
T5: 39 (4, 29)
T6: 44±6 (4.5±0.6, 32.5±4.3)
T7: 49±10 (5.0±1.0, 36±7)
T8: 54±5 (5.5±0.5, 39.8±3.6)
T9: 98±15 (10.0±1.5, 72±11)
T10:152±20 (15.5±2.0, 112±14)
T11:186±10 (19.0±1.0, 137±7)
T12:245±49 (25.0±5.0, 181±36)

2. REAR SUSPENSION (AWD MODEL)

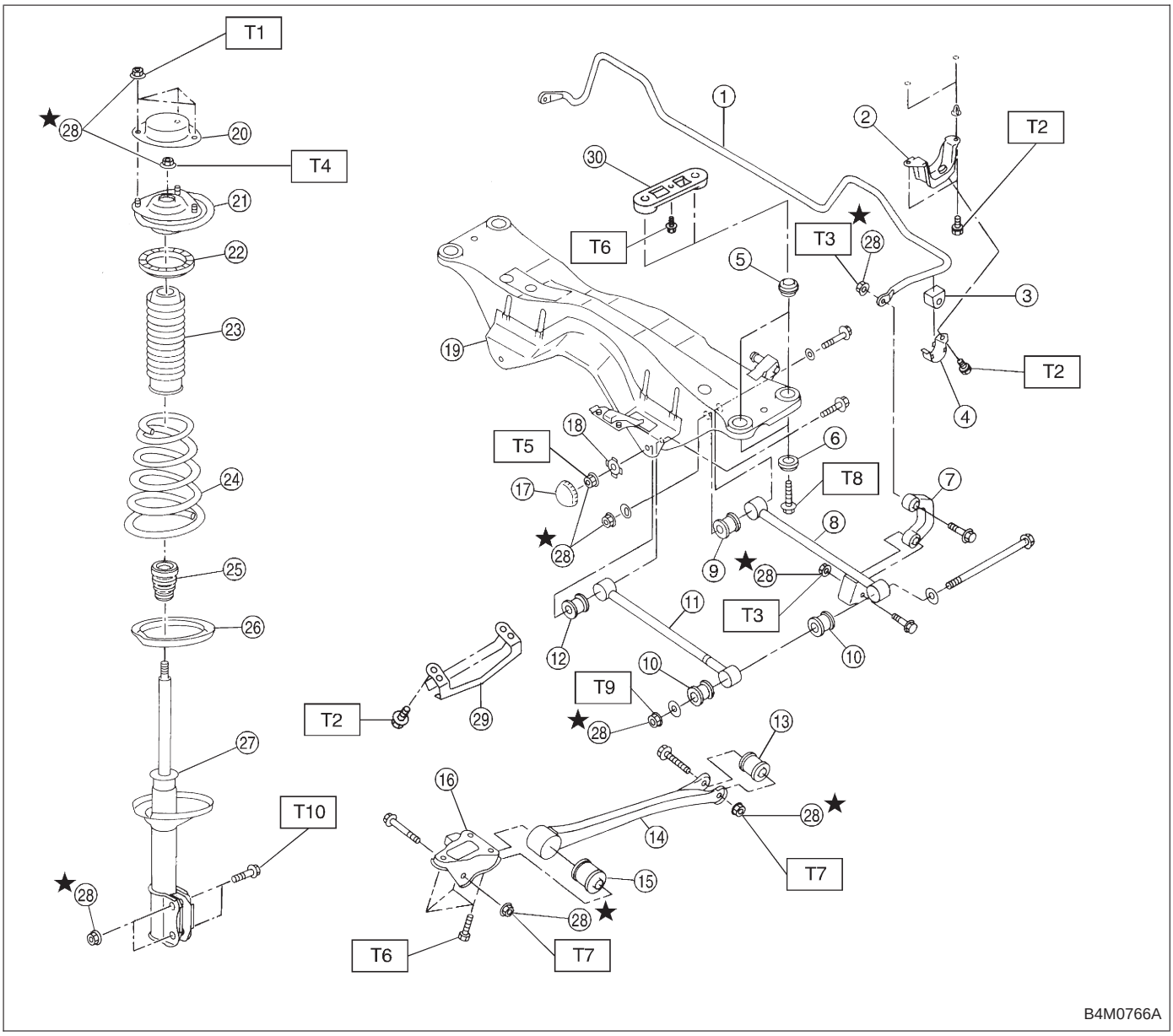

① Stabilizer
② Stabilizer bracket
③ Stabilizer bushing
④ Clamp
⑤ Floating bushing
⑥ Stopper
⑦ Stabilizer link
⑧ Rear lateral link
⑨ Bushing (C)
⑩ Bushing (A)
⑪ Front lateral link
⑫ Bushing (B)
⑬ Trailing link rear bushing
⑭ Trailing link
⑮ Trailing link front bushing
⑯ Trailing link bracket
⑰ Cap (Protection)
⑱ Washer
⑲ Rear crossmember
⑳ Strut mount cap
㉑ Strut mount
㉒ Rubber seat upper
㉓ Dust cover
㉔ Coil spring
㉕ Helper
㉖ Rubber seat lower
㉗ Damper strut
㉘ Self-locking nut
㉙ Crossmember reinforcement lower (Sedan model)
㉚ Adapter rear crossmember (OUTBACK model)

Tightening torque: N·m (kg-m, ft-lb)
T1: 20±6 (2.0±0.6, 14.5±4.3)
T2: 25±7 (2.5±0.7, 18.1±5.1)
T3: 44±6 (4.5±0.6, 32.5±4.3)
T4: 59±10 (6.0±1.0, 43±7)
T5: 98±15 (10.0±1.5, 72±11)
T6: 98±20 (10.0±2.0, 72±14)
T7: 113±15 (11.5±1.5, 83±11)
T8: 127±20 (13.0±2.0, 94±14)
T9: 137±20 (14.0±2.0, 101±14)
T10: 196^{+39}_{-10} ($20.0^{+4.0}_{-1.0}$, 145^{+29}_{-7})

COMPONENT PARTS

3. REAR SUSPENSION (FWD MODEL)

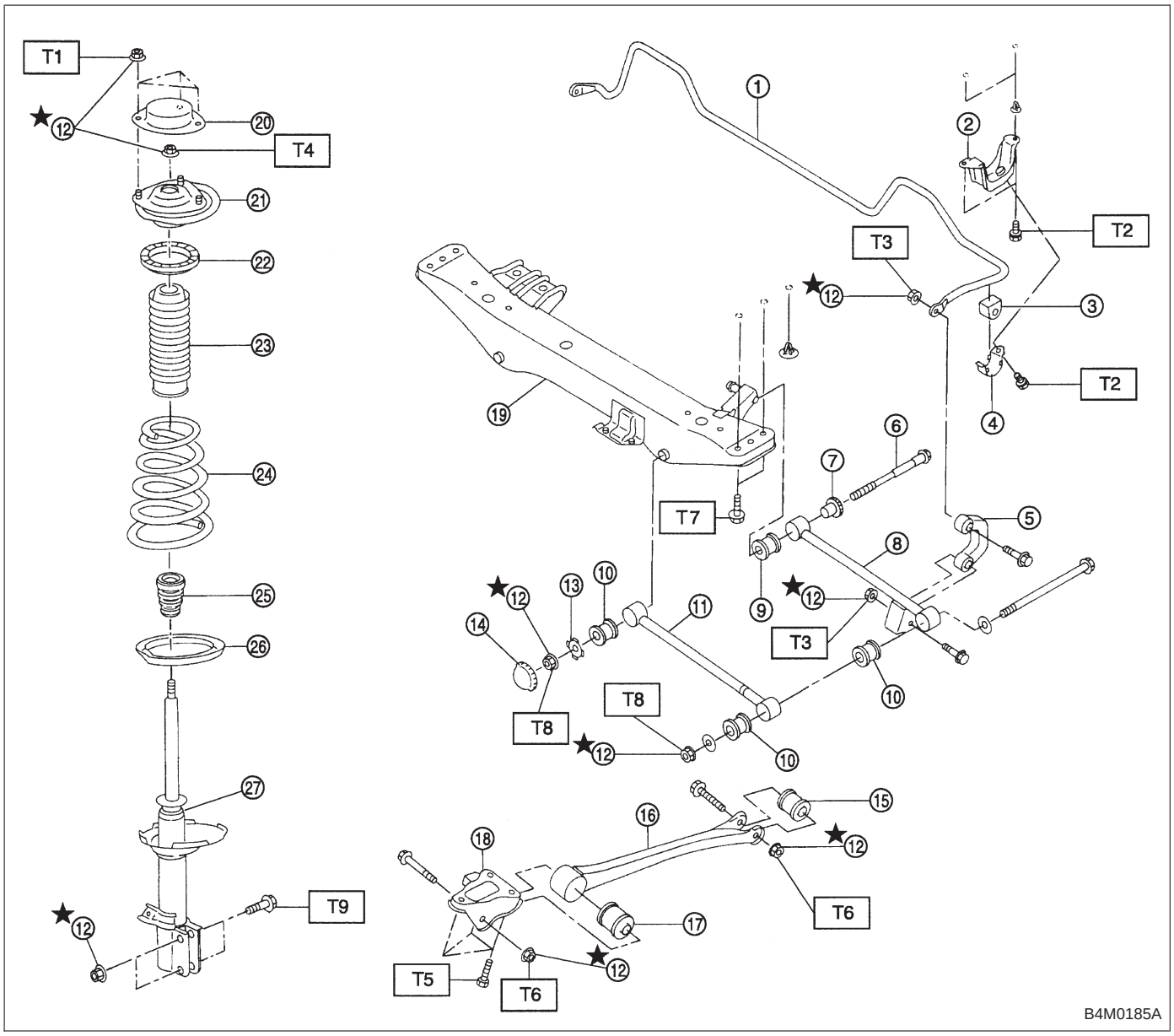

① Stabilizer
② Stabilizer bracket
③ Stabilizer bushing
④ Clamp
⑤ Stabilizer link
⑥ Adjusting bolt
⑦ Adjusting wheel
⑧ Rear lateral link
⑨ Bushing (D)
⑩ Bushing (A)
⑪ Front lateral link
⑫ Self-locking nut
⑬ Washer
⑭ Cap (Protection)
⑮ Trailing link rear bushing
⑯ Trailing link
⑰ Trailing link front bushing
⑱ Trailing link bracket
⑲ Crossmember
⑳ Strut mount cap
㉑ Strut mount
㉒ Rubber seat upper
㉓ Dust cover
㉔ Coil spring
㉕ Helper
㉖ Rubber seat lower
㉗ Damper strut

Tightening torque: N·m (kg-m, ft-lb)
T1: 20±6 (2.0±0.6, 14.5±4.3)
T2: 25±7 (2.5±0.7, 18.1±5.1)
T3: 44±6 (4.5±0.6, 32.5±4.3)
T4: 59±10 (6.0±1.0, 43±7)
T5: 98±20 (10.0±2.0, 72±14)
T6: 113±15 (11.5±1.5, 83±11)
T7: 127±20 (13.0±2.0, 94±14)
T8: 137±20 (14.0±2.0, 101±14)
T9: 196^{+39}_{-10} ($20.0^{+4.0}_{-1.0}$, 145^{+29}_{-7})