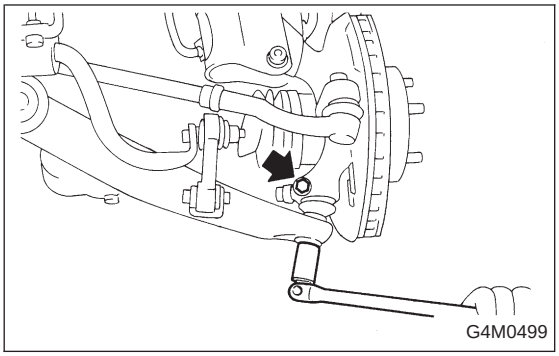
G4M0499

3. Front Ball Joint

A: REMOVAL

1) Remove the wheel.
2) Pull out the cotter pin from the ball stud, remove the castle nut, and extract the ball stud from the transverse link.
3) Remove the bolt securing the ball joint to the housing.
4) Extract the ball joint from the housing.

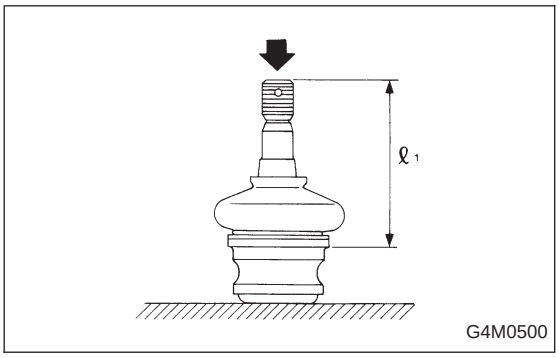

G4M0500

B: INSPECTION

1) Measure play of ball joint by the following procedures. Replace with a new one when the play exceeds the specified value.

(1) With 686 N (70 kg, 154 lb) loaded in the direction shown in the figure, measure dimension ℓ_1.

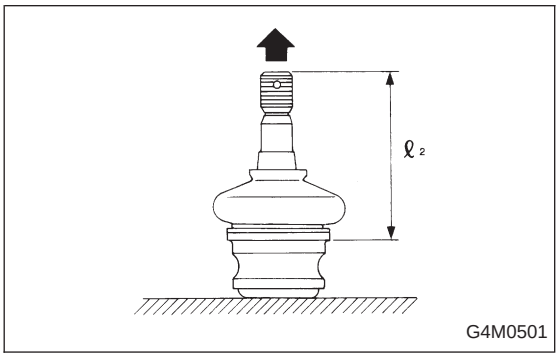

G4M0501

(2) With 686 N (70 kg, 154 lb) loaded in the opposite direction shown in the figure, measure dimension ℓ_2.
(3) Calculate plays from the following formula.
$S = \ell_2 - \ell_1$
(4) When plays are larger than the following value, replace with a new one.

FRONT BALL JOINT
Specified play for replacement: S
Less than 0.3 mm (0.012 in)

2) When play is smaller than the specified value, visually inspect the dust cover.
3) If the dust cover is damaged, replace with the new ball joint.
4) Check ball joint for damage and cracks. If defective, replace with new one.

C: INSTALLATION

1) Install ball joint onto housing.

Torque (Bolt):
49±10 N·m (5.0±1.0 kg-m, 36±7 ft-lb)

CAUTION:
Do not apply grease to tapered portion of ball stud.

2) Connect ball joint to transverse link.

Torque (Castle nut):
39 N·m (4.0 kg-m, 29 ft-lb)

3) Retighten castle nut further within 60° until a slot in castle nut is aligned with the hole of ball stud end, then insert new cotter pin and bend it around castle nut.
4) Install front wheel.