5. Front Stabilizer

A: REMOVAL

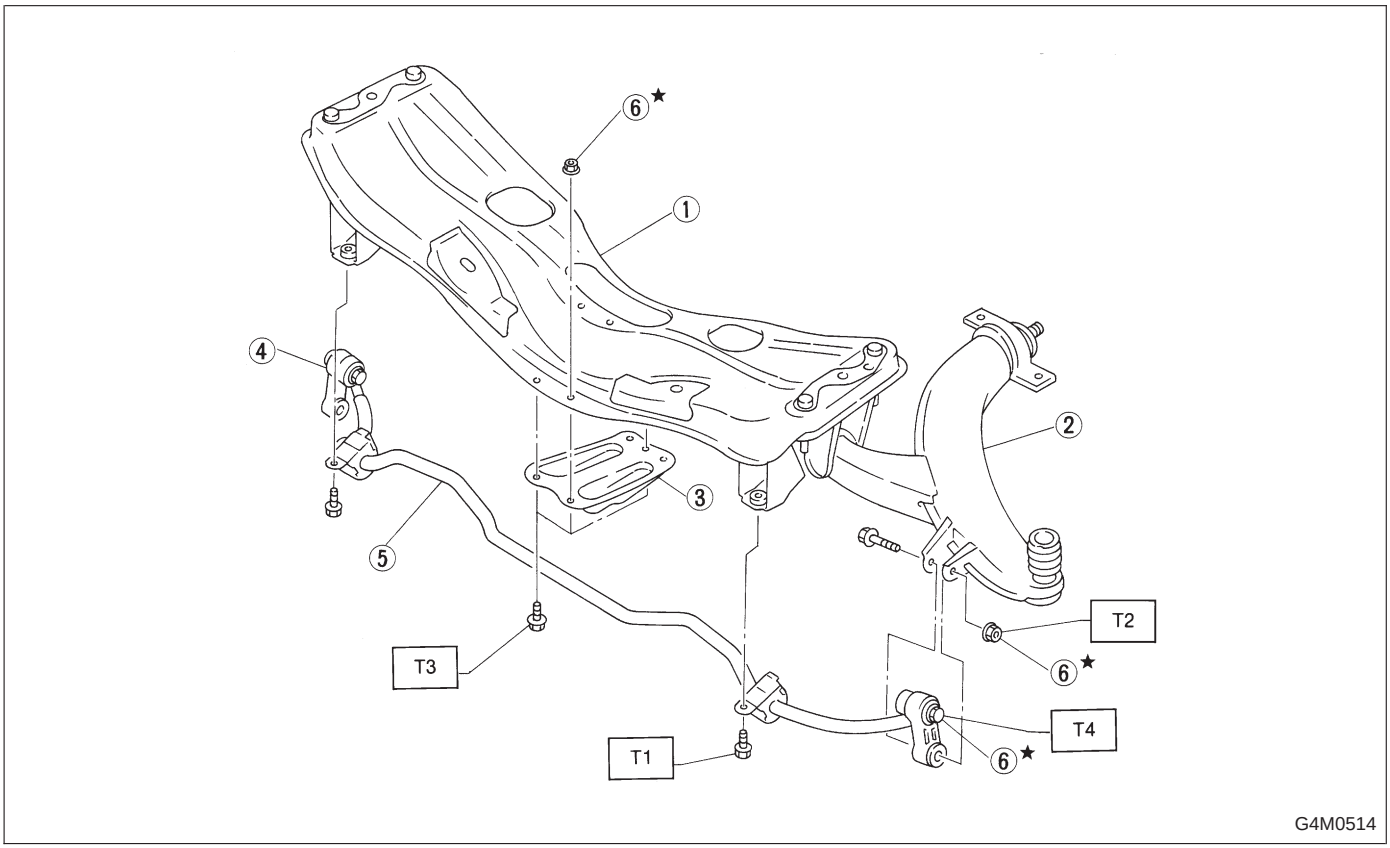

① Front crossmember
② Transverse link
③ Jack-up plate
④ Stabilizer link
⑤ Front stabilizer
⑥ Self-locking nut

Tightening torque: N·m (kg-m, ft-lb)
T1: 25±4 (2.5±0.4, 18.1±2.9)
T2: 29±5 (3.0±0.5, 21.7±3.6)
T3: 18±5 (1.8±0.5, 13.0±3.6)
T4: 44±6 (4.5±0.6, 32.5±4.3)

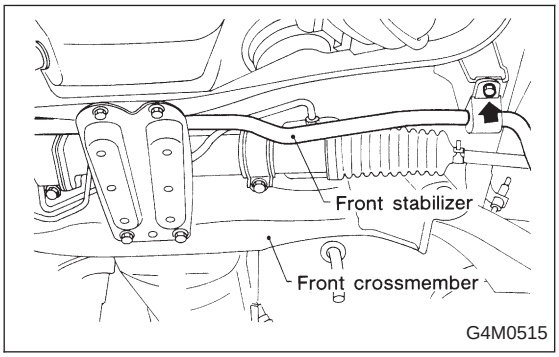

1) Jack-up the front part of the vehicle, support it with safety stand (rigid racks).
2) Remove bolts which secure stabilizer to crossmember.

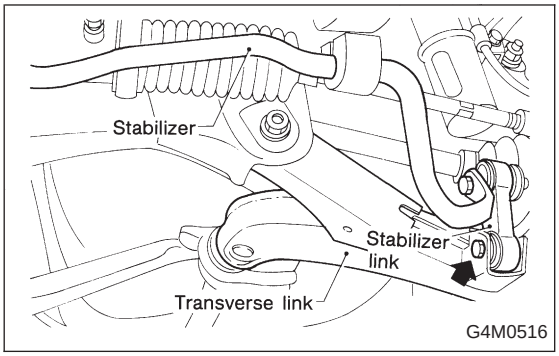

3) Remove bolts which secure stabilizer link to front transverse link.
4) Remove jack-up plate from lower part of crossmember.

B: INSPECTION

1) Check bushing for cracks, fatigue or damage.
2) Check stabilizer link for deformities, cracks, or damage, and bushing for protrusions from the hole of stabilizer link and its play.

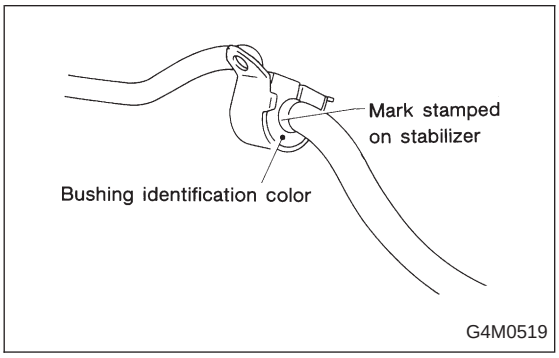

C: INSTALLATION

1) To install, reverse the removal procedure.

NOTE:
- Install bushing (on front crossmember side) while aligning it with paint mark on stabilizer.
- Ensure that bushing and stabilizer have the same identification colors when installing.

2) Always tighten rubber bushing location when wheels are in full contact with the ground and vehicle is at curb weight condition.

Tightening torque:

Jack-up plate to crossmember:
18±5 N·m (1.8±0.5 kg-m, 13.0±3.6 ft-lb)
Stabilizer link to front transverse link:
29±5 N·m (3.0±0.5 kg-m, 21.7±3.6 ft-lb)
Stabilizer to crossmember:
25±4 N·m (2.5±0.4 kg-m, 18.1±2.9 ft-lb)