# 4. Front Strut

## A: REMOVAL

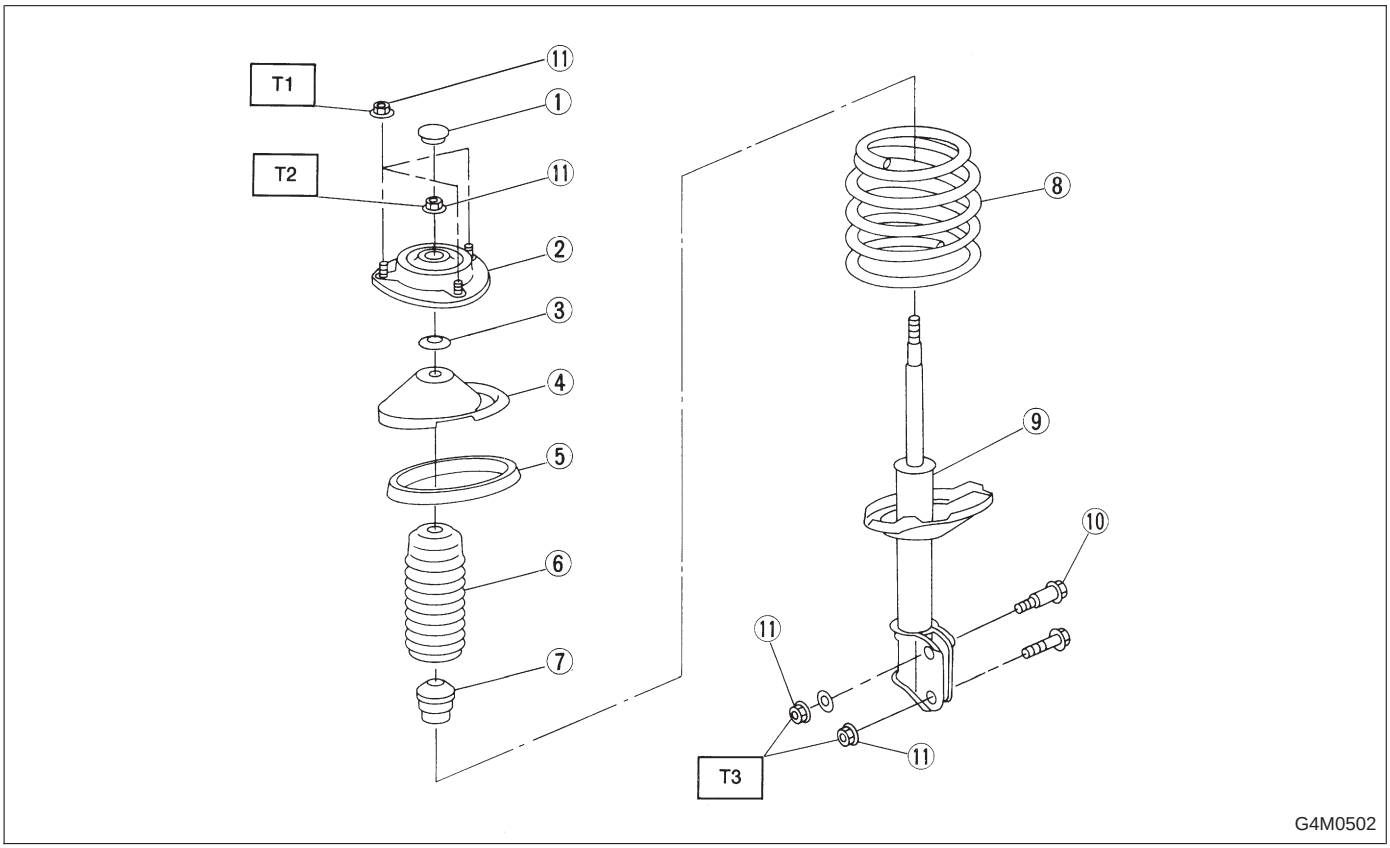


① Dust seal
② Strut mount
③ Spacer
④ Upper spring seat
⑤ Rubber seat
⑥ Dust cover
⑦ Helper
⑧ Coil spring
⑨ Damper strut
⑩ Adjusting bolt
⑪ Self-locking nut

***Tightening torque: N·m (kg-m, ft-lb)***
***T1: 20±6 (2.0±0.6, 14.5±4.3)***
***T2: 54±5 (5.5±0.5, 39.8±3.6)***
***T3: 152±20 (15.5±2.0, 112±14)***

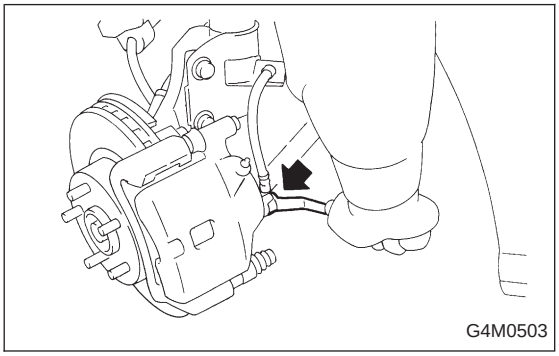


1) Remove wheel.
2) Depress brake pedal and hold it down using a wooden block etc.
3) Remove union bolts from caliper.

**CAUTION:**
**Use brake hose cap to prevent brake fluid from escaping.**

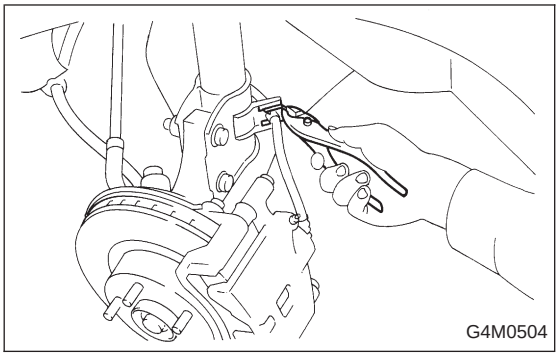


4) Remove brake hose clamp and disconnect brake hose from strut. Attach brake hose to body using gum tape.
5) Scribe an alignment mark on the camber adjusting bolt which secures strut to housing.
6) Remove bolt securing the A.B.S. sensor harness. (A.B.S. equipped models.)

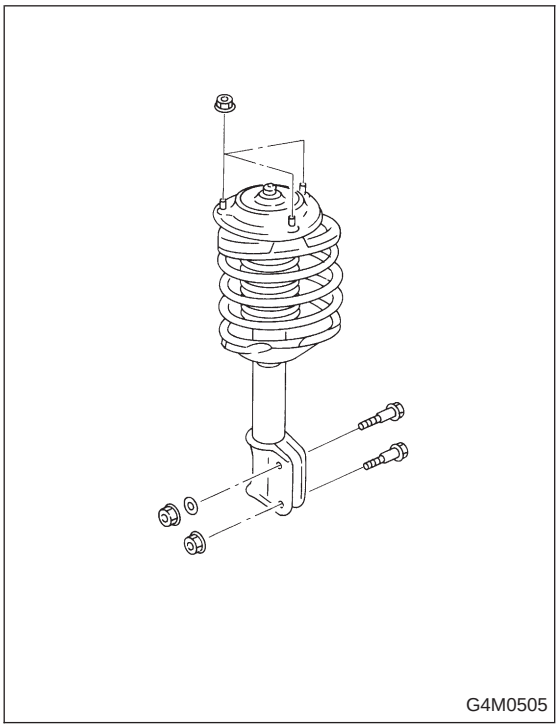


7) Remove two bolts securing housing to strut.

**CAUTION:**
**While holding head of adjusting bolt, loosen self-locking nut.**

8) Remove the three nuts securing strut mount to body.

## B: DISASSEMBLY

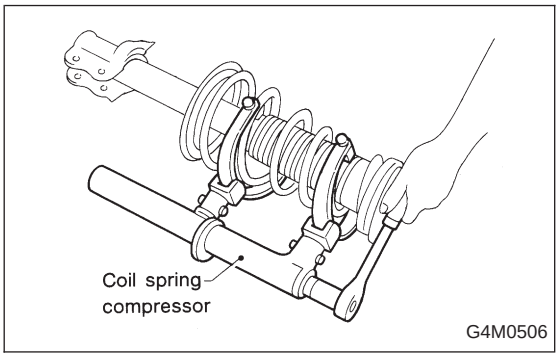


1) Using a coil spring compressor, compress coil spring.

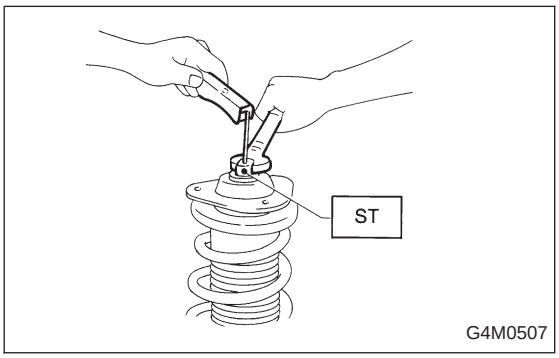


2) Using ST, remove self-locking nut.

ST 927760000 STRUT MOUNT SOCKET

3) Remove strut mount, upper spring seat and rubber seat from strut.
4) Gradually decreasing compression force of spring compressor, and remove coil spring.
5) Remove dust cover and helper.

## C: INSPECTION

Check the disassembled parts for cracks, damage and wear, and replace with new parts if defective.

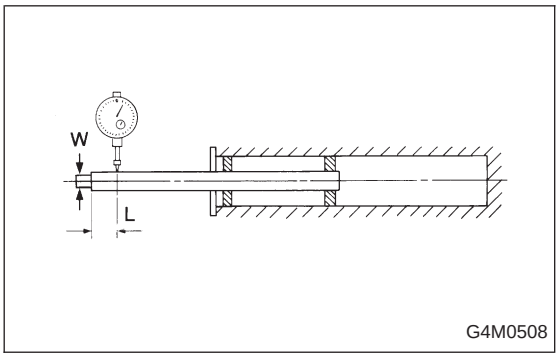


### 1. DAMPER STRUT

1) Check for oil leakage.
2) Move the piston rod up and down to check its operates smoothly without any binding.
3) Play of piston rod

Measure the play as follows:
Fix outer shell and fully extend the rod. Set a dial gauge at the end of the rod: L [10 mm (0.39 in)], then apply a force of W [20 N (2 kg, 4 lb)] to threaded portion. With the force of 20 N (2 kg, 4 lb) applied, read dial gauge indication: $P_1$. Apply a force of 20 N (2 kg, 4 lb) in the opposite direction of “W”, then read dial gauge indication: $P_2$. The free play is determined by the following equation:

***Play = $P_1$, $P_2$***

***Limit of play:***
***Less than 0.8 mm (0.031 in)***

If the play is greater, replace the strut with new one.

### 2. STRUT MOUNT

Check rubber part for wear, cracks and deterioration, and replace it with new one if defective.

### 3. DUST COVER

If any cracks or damage are found, replace it with new one.

### 4. COIL SPRING

When vehicle posture is uneven, although there are no considerable reasons like tire puncture, uneven loading, etc., check coil spring and spring seats for cracks, deformation, etc., and replace it with a new one if defective.

### 5. HELPER

Replace it with new one if cracked or damaged.

## D: ASSEMBLY

1) Before installing coil spring, strut mount, etc., on the strut, check for the presence of air in the dampening force generating mechanism of the strut since air prevents proper dampening force from being produced.

2) Checking for the presence of air

(1) Place the strut vertically with the piston rod facing upward.
(2) Move the piston rod to the center of its entire stroke.
(3) While holding the piston rod end with finger-tips, move the rod up and down.
(4) If the piston rod moves at least 10 mm (0.39 in) in step (3), purge air from the strut.

3) Air purging procedure

(1) Place the strut vertically with the piston rod facing upward.
(2) Fully extend the piston rod.
(3) With the piston rod fully extended, place the piston rod side down. The strut must stand vertically.
(4) Fully contract the piston rod.
(5) Repeat 3 or 4 times steps (1) through (4) above.

NOTE:
After completely purging air from the strut, be sure to place the strut with the piston rod facing upward. If it is laid down, check for entry of air in the strut as outlined under item 2) above.

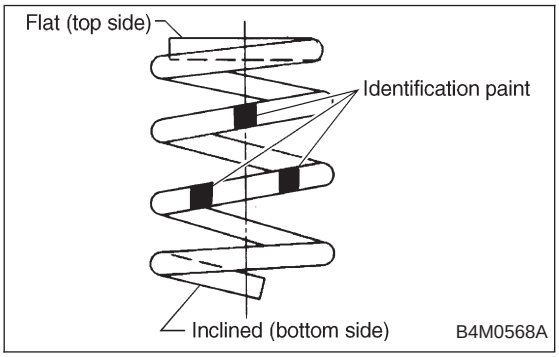


4) Using a coil spring compressor, compress the coil spring.

NOTE:
Make sure that the vertical installing direction of coil spring is as shown in figure.

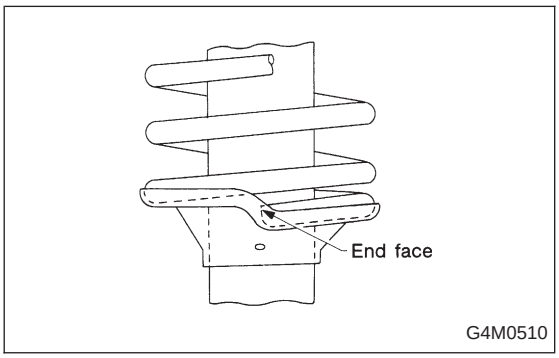


5) Set the coil spring correctly so that its end face fits well into the spring seat as shown.

6) Install helper and dust cover to the piston rod.

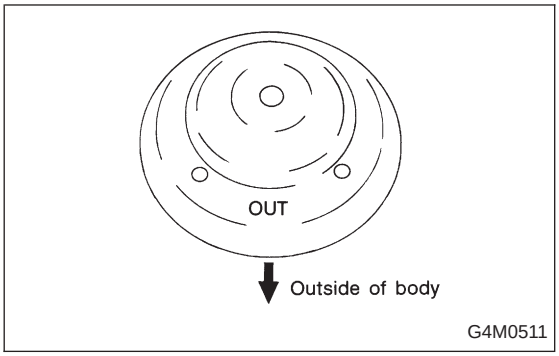


7) Pull the piston rod fully upward, and install rubber seat and spring seat.

NOTE:
Ensure that upper spring seat is positioned with “OUT” mark facing outward.

8) Install strut mount to the piston rod, and tighten the self-locking nut temporarily.

**CAUTION:**
**Be sure to use a new self-locking nut.**

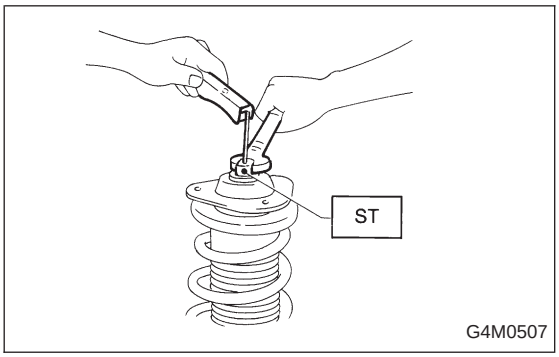


9) Using hexagon wrench to prevent strut rod from turning, tighten self-locking nut with ST.

***Tightening torque:***
***54±5 N·m (5.5±0.5 kg-m, 39.8±3.6 ft-lb)***

ST 927760000 STRUT MOUNT SOCKET

10) Loosen the coil spring carefully.

## E: INSTALLATION

1) Install strut mount at upper side of strut to body and tighten with nuts.

***Tightening torque:***
***20±6 N·m (2.0±0.6 kg-m, 14.5±4.3 ft-lb)***

2) Connect housing to lower side of strut.

3) Position aligning mark on camber adjusting bolt with aligning mark on lower side bracket of strut.

**CAUTION:**
- **While holding head of adjusting bolt, tighten self-locking nut.**
- **Be sure to use new self-locking nut.**

***Tightening torque:***
***152±20 N·m (15.5±2.0 kg-m, 112±14 ft-lb)***

4) Install A.B.S. sensor harness to strut. (A.B.S. equipped models.)

***Tightening torque:***
***152±20 N·m (15.5±2.0 kg-m, 112±14 ft-lb)***

5) Install brake hose at lower side of strut with clamp.

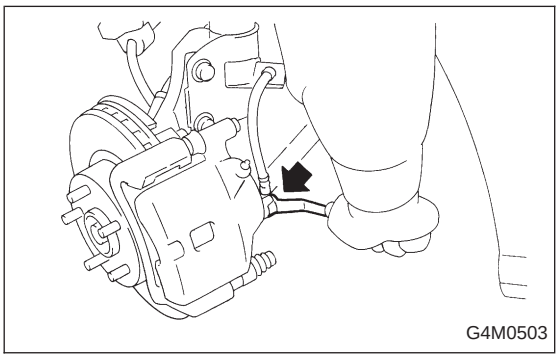


6) Install union bolts which secure brake caliper to brake hose.

***Tightening torque:***
***18±3 N·m (1.8±0.3 kg-m, 13.0±2.2 ft-lb)***

**CAUTION:**
**Be sure to bleed air from brake system.**

7) Install wheels.

NOTE:
Check wheel alignment and adjust if necessary.