2. Front Transverse Link

A: REMOVAL

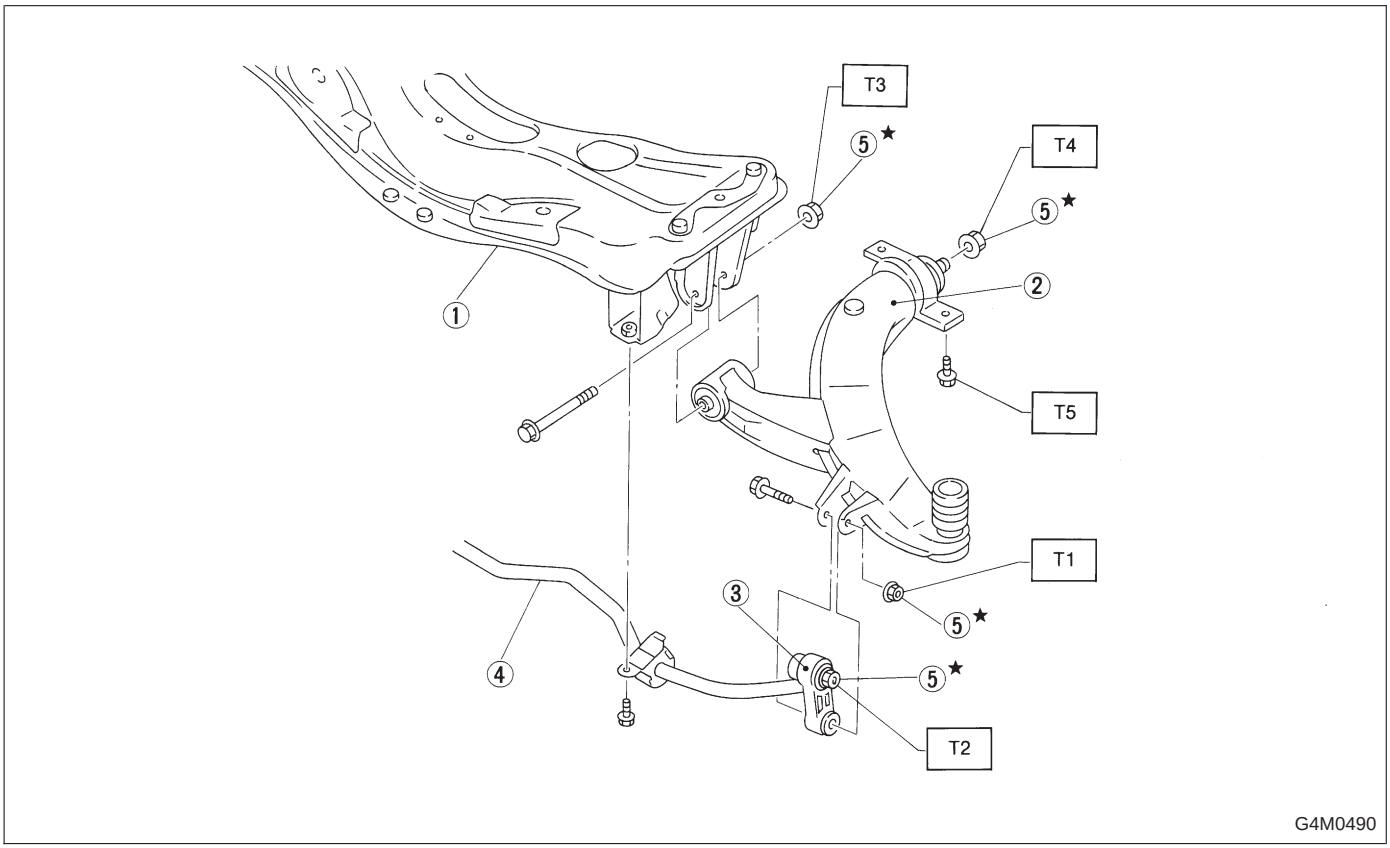

① Front crossmember
② Transverse link
③ Stabilizer link
④ Front stabilizer
⑤ Self-locking nut

Tightening torque: N·m (kg-m, ft-lb)
T1: 29±5 (3.0±0.5, 21.7±3.6)
T2: 44±6 (4.5±0.6, 32.5±4.3)
T3: 98±15 (10.0±1.5, 72±11)
T4: 186±10 (19.0±1.0, 137±7)
T5: 245±49 (25.0±5.0, 181±36)

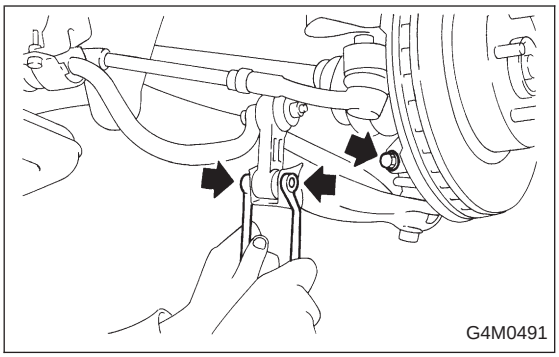

1) Disconnect stabilizer link from transverse link.
2) Remove bolt securing ball joint of transverse link to housing.

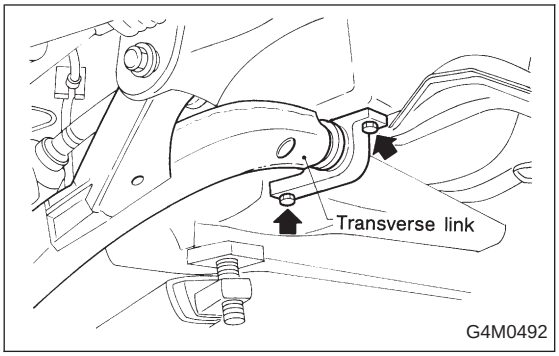

3) Remove nut (do not remove bolt.) securing transverse link to crossmember.
4) Remove two bolts securing bushing bracket of transverse link to vehicle body at rear bushing location.

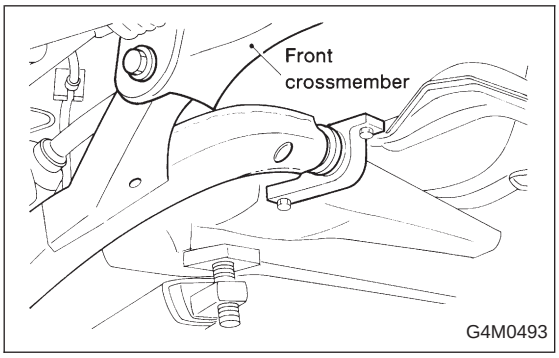

5) Extract ball joint from housing.
6) Remove bolt securing transverse link to crossmember and extract transverse link from crossmember.

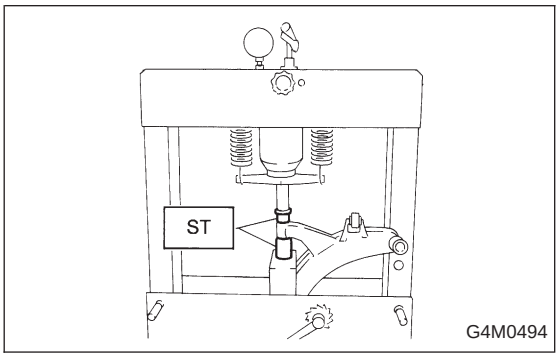

B: DISASSEMBLY

1. FRONT BUSHING

Using ST, press front bushing out of place.

ST 927680000 INSTALLER & REMOVER SET

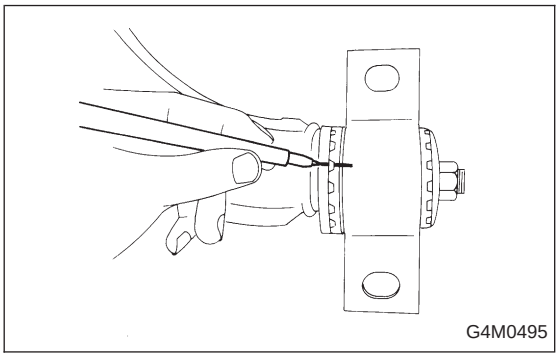

2. REAR BUSHING

1) Scribe an aligning mark on transverse link and rear bushing.

2) Loosen nut and remove rear bushing.

C: INSPECTION

1) Check transverse link for wear, damage and cracks, and correct or replace if defective.
2) Check bushings for cracks, wear,damage and creeping.
3) Check rear bushing for oil leaks.
4) If defective, replace with new one.

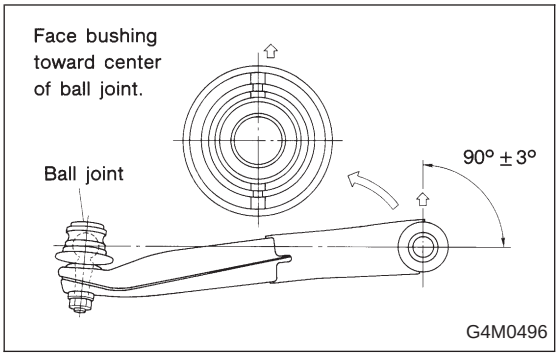

D: ASSEMBLY

1. FRONT BUSHING

To reassemble, reverse disassembly procedures.

CAUTION:
Install front bushing in correct direction, as shown in figure.

2. REAR BUSHING

1) Install rear bushing to transverse link and align aligning marks scribed on the two.
2) Tighten self-locking nut.

CAUTION:
- **Discard loosened self-locking nut and replace with a new one.**
- **While holding rear bushing so as not to change position of aligning marks, tighten self-locking nut.**

Tightening torque:
186±10 N·m (19.0±1.0 kg-m, 137±7 ft-lb)

E: INSTALLATION

1) Temporarily tighten the two bolts used to secure rear bushing of the transverse link to body.

NOTE:
These bolts should be tightened to such an extent that they can still move back and forth in the oblong shaped hole in the bracket (which holds the bushing).

2) Install bolts used to connect transverse link to cross-member and temporarily tighten with nut.

CAUTION:
Discard loosened self-locking nut and replace with a new one.

3) Insert ball joint into housing.

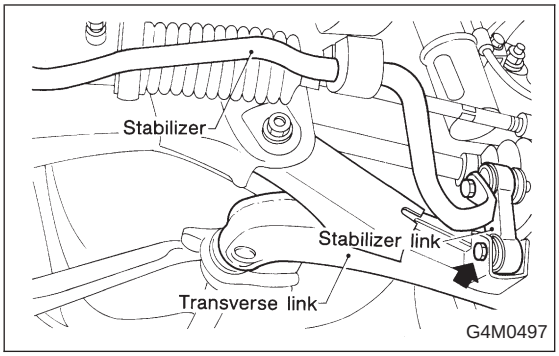

4) Connect stabilizer link to transverse link, and temporarily tighten bolts.

CAUTION:
Discard loosened self-locking nut and replace with a new one.

5) Tighten the following points in the order shown below when wheels are in full contact with the ground and vehicle is at curb weight condition.

(1) Transverse link and stabilizer link

Tightening torque:
29±5 N·m (3.0±0.5 kg-m, 21.7±3.6 ft-lb)

(2) Transverse link and crossmember

Tightening torque:
98±15 N·m (10.0±1.5 kg-m, 72±11 ft-lb)

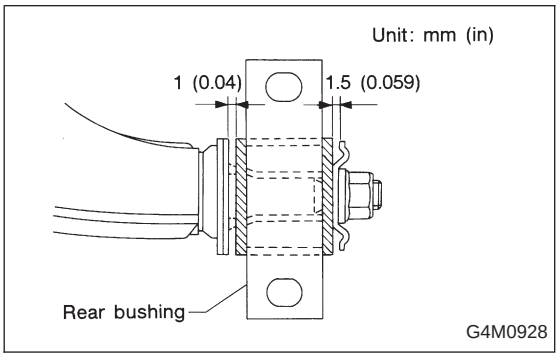

(3) Transverse link rear bushing and body

Tightening torque:
245±49 N·m (25±5 kg-m, 181±36 ft-lb)

NOTE:
- Move rear bushing back and forth until transverse link-to-rear bushing clearance is established (as indicated in figure.) before tightening.
- Check wheel alignment and adjust if necessary.