8. Lateral Link

A: REMOVAL

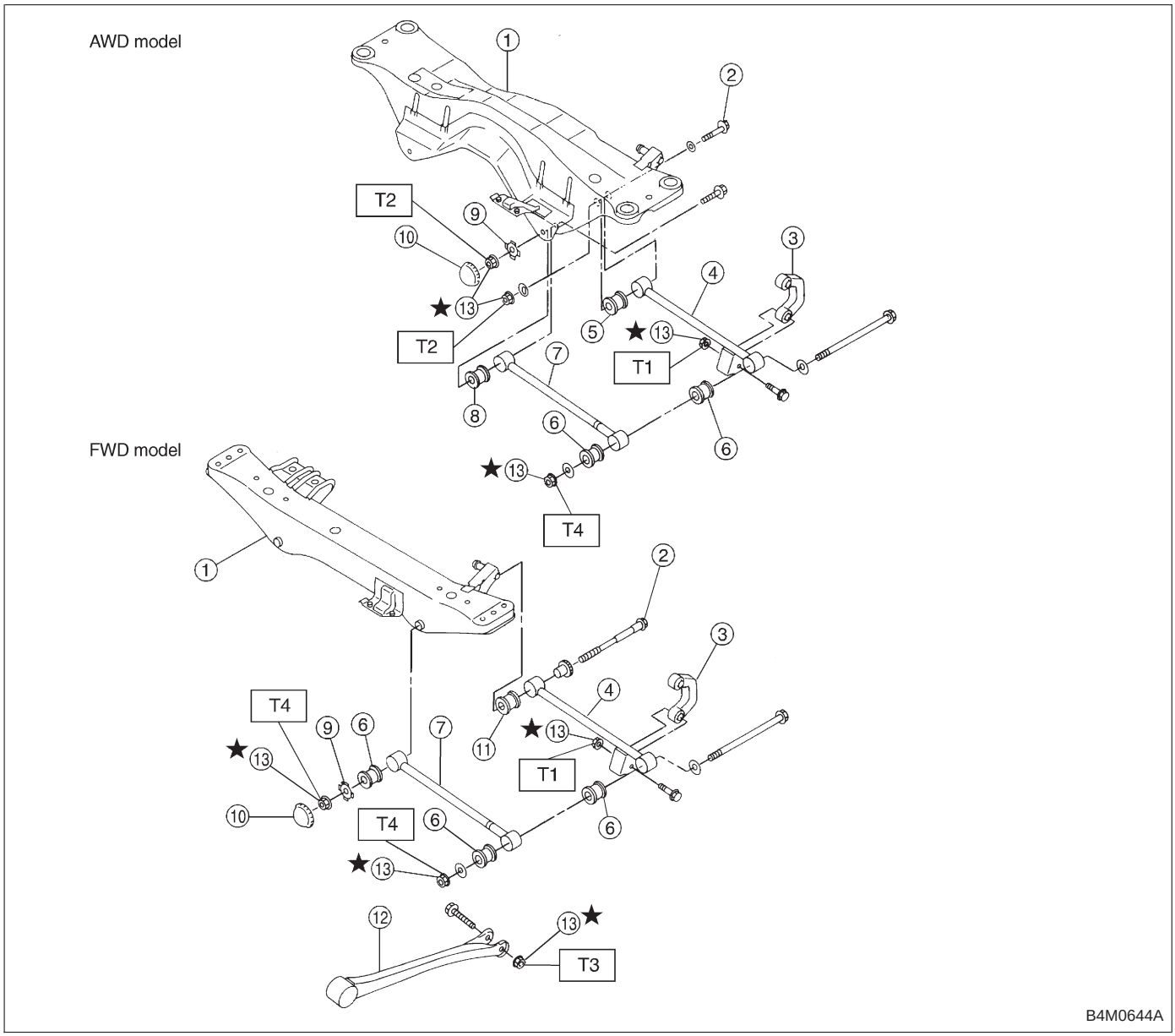

① Crossmember
② Adjusting bolt
③ Stabilizer link
④ Rear lateral link
⑤ Bushing (C)
⑥ Bushing (A)
⑦ Front lateral link
⑧ Bushing (B)
⑨ Washer
⑩ Cap (Protection)
⑪ Bushing (D)
⑫ Trailing link
⑬ Self-locking nut

Tightening torque: N·m (kg-m, ft-lb)
T1: 44±6 (4.5±0.6, 32.5±4.3)
T2: 98±15 (10.0±1.5, 72±11)
T3: 113±15 (11.5±1.5, 83±11)
T4: 137±20 (14.0±2.0, 101±14)

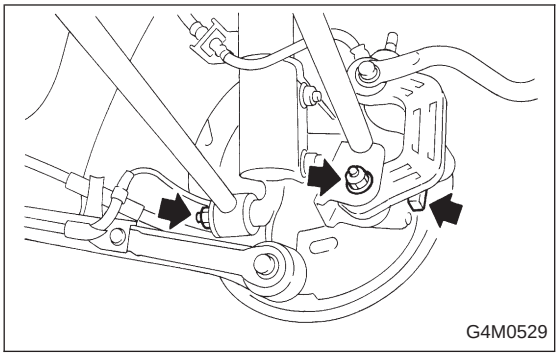

1. FWD MODEL

1) Loosen wheel nuts. Lift-up vehicle and remove wheel.
2) Remove rear exhaust pipe and muffler.
3) Remove stabilizer link from rear lateral link.
4) Scribe an aligning mark on adjusting bolt, adjusting wheel and crossmember.
5) Remove bolts securing lateral links to housing.
6) Turn cap (lateral link) counterclockwise until it contacts stopper, then remove cap.
7) While holding adjusting bolt's head with a wrench, loosen self-locking nut.

CAUTION:
Always loosen self-locking nut before turning adjusting bolt.

8) Lateral link removal
   (1) Left lateral links
   Remove adjusting bolt and front and rear lateral links.
   (2) Right lateral links
   Support crossmember with transmission jack.
   Remove bolts securing crossmember to vehicle body. Lower transmission jack until adjusting bolt can be removed. Remove adjusting bolt, front and rear lateral links.

2. AWD MODEL

1) Loosen wheel nuts. Lift-up vehicle and remove wheel.
2) Remove stabilizers link from lateral link.
3) Remove A.B.S. sensor harness from trailing link. (A.B.S. equipped models.)

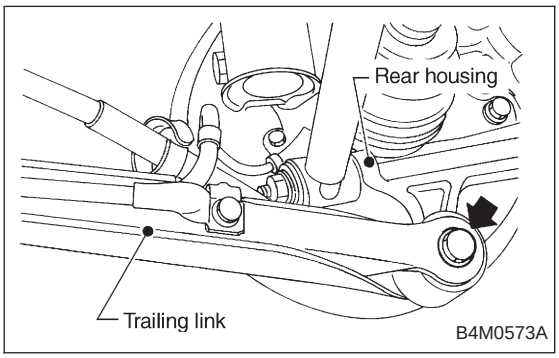

4) Remove bolt securing trailing link to housing.
5) Remove DOJ from differential. <Ref. to 4-2 [W4A2].>
6) Scribe an alignment mark on rear lateral link adjusting bolt and crossmember.
7) Remove bolt securing lateral link to housing.
8) Remove bolts securing front and rear lateral links to crossmember, detach lateral links.

CAUTION:
To loosen adjusting bolt, always loosen nut while holding the head of adjusting bolt.

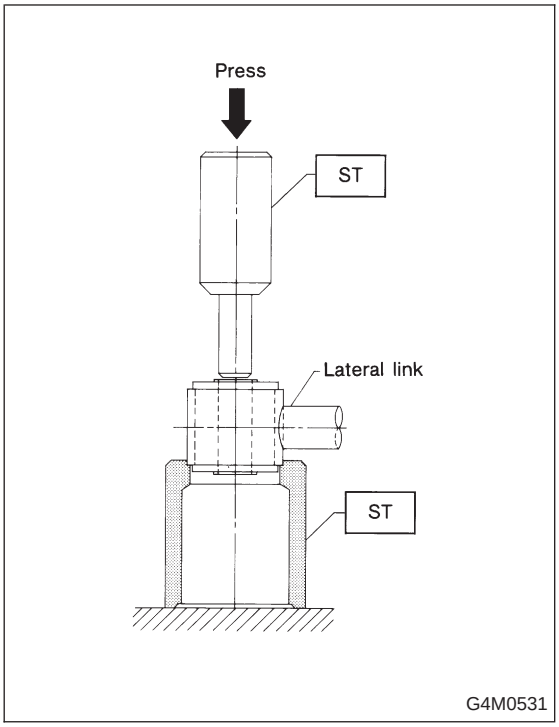

B: DISASSEMBLY

Using ST, press bushing out of place.

NOTE:

- Using the following table as a guide, verify the type of bushings.
- Select ST according to the type of bushings used.

Bushing	ST: INSTALLER & REMOVER SET
Bushing A	927700000
Bushing B	927690000
Bushing C	927700000
Bushing D	927710000

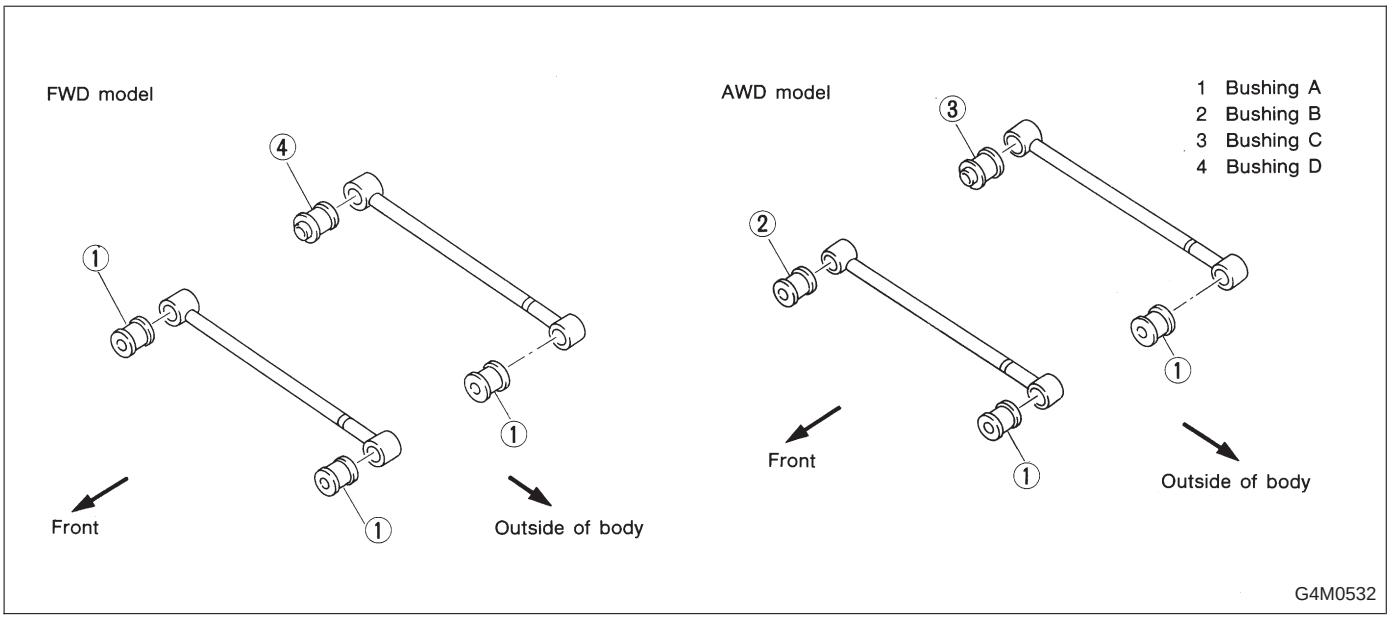

C: INSPECTION

Visually check lateral links for damage or bends.

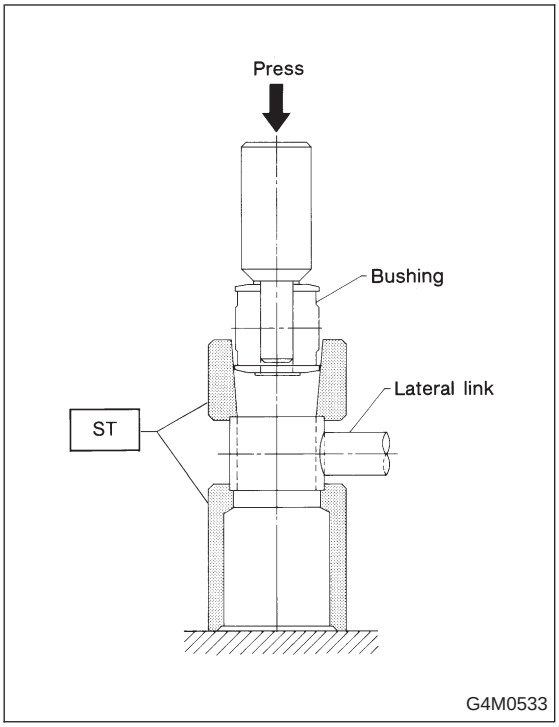

D: ASSEMBLY

1) Using ST, press bushing into place.

CAUTION:
Select ST according to the type of bushings used.

NOTE:
- Use the same ST as that used during disassembly.
- If it is difficult to press bushing into trailing link, apply water-diluted TIRE LUBE to the inner surface of ST as a lubricant.

Specified lubricant:
TIRE LUBE : water = 1 : 3

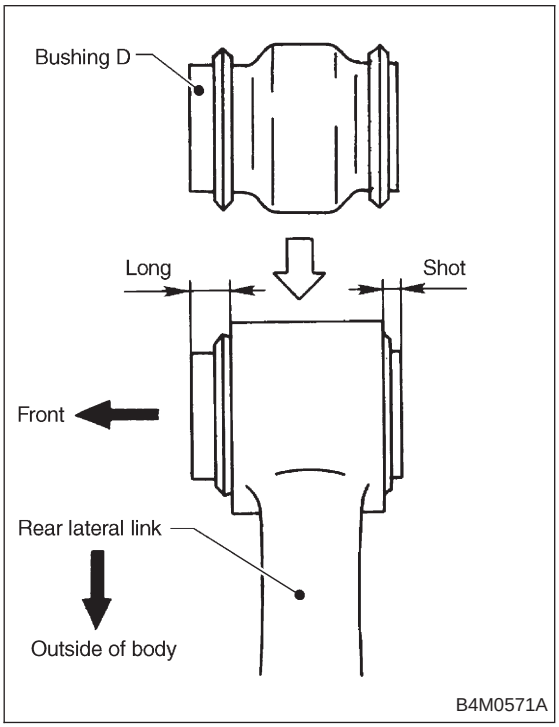

NOTE:
Pay attention to the direction of bushing “D” as shown in figure.

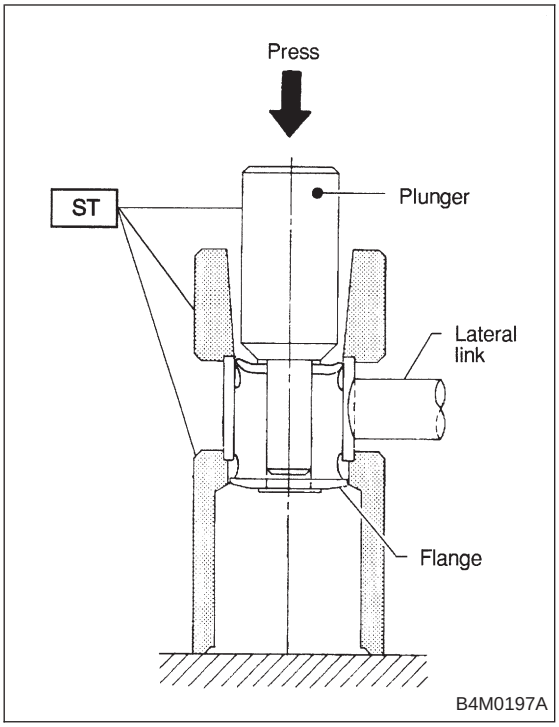

2) Press ST plunger until bushing flange protrudes beyond lateral link.
NOTE:
Use the same ST as that used during disassembly.

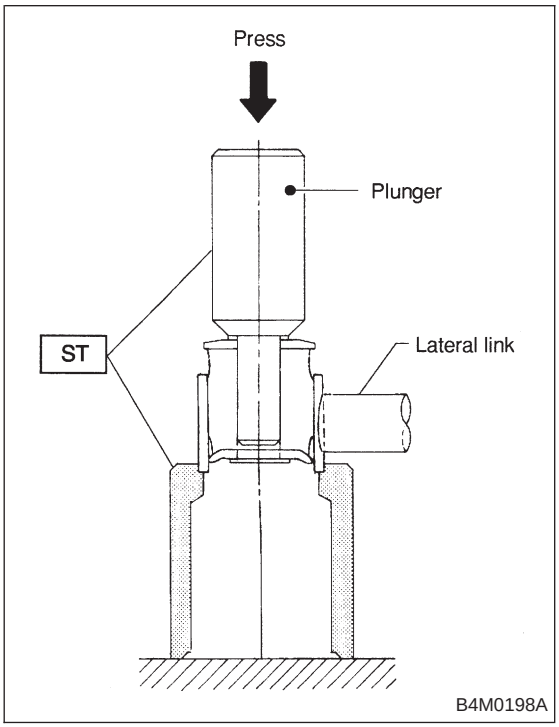

3) Turn lateral link upside down. Press ST plunger in the opposite direction that outlined in step 2) until bushing is correctly positioned in trailing link.
NOTE:
Use the same ST as that used during disassembly.

E: INSTALLATION

To install, reverse removal procedures, reading the following instructions.

CAUTION:

- **Always tighten rubber bushing when wheels are in full contact with the ground and vehicle is at curb weight condition.**
- **Tighten nut when installing adjusting bolt.**
- **Replace self-locking nut and DOJ circlip with new ones.**

NOTE:

- Lateral link washers for FWD and AWD models can be identified by colors, as follows:
  Olive (FWD model)
  Gold (AWD model)
- Check wheel alignment and adjust if necessary.