1. On-car Services

A: WHEEL ALIGNMENT

Check, adjust and/or measure wheel alignment in accordance with procedures indicated below:

1. Wheel arch height (Front and rear)
2. Camber (Front and rear)
3. Caster (Front)
4. Front toe-in
5. Rear toe-in
6. Thrust angle (Rear)
7. Wheel steering angle

SERVICE PROCEDURE

1. WHEEL ARCH HEIGHT

1) Adjust tire pressure to specifications.
2) Set vehicle under “curb weight” conditions. (Empty luggage compartment, install spare tire, jack, service tools, and top up fuel tank.)
3) Set steering wheel in a wheel-forward position.
4) Suspend thread from wheel arch (point “A” in figure below) to determine a point directly above center of spindle.
5) Measure distance between measuring point and center of spindle.

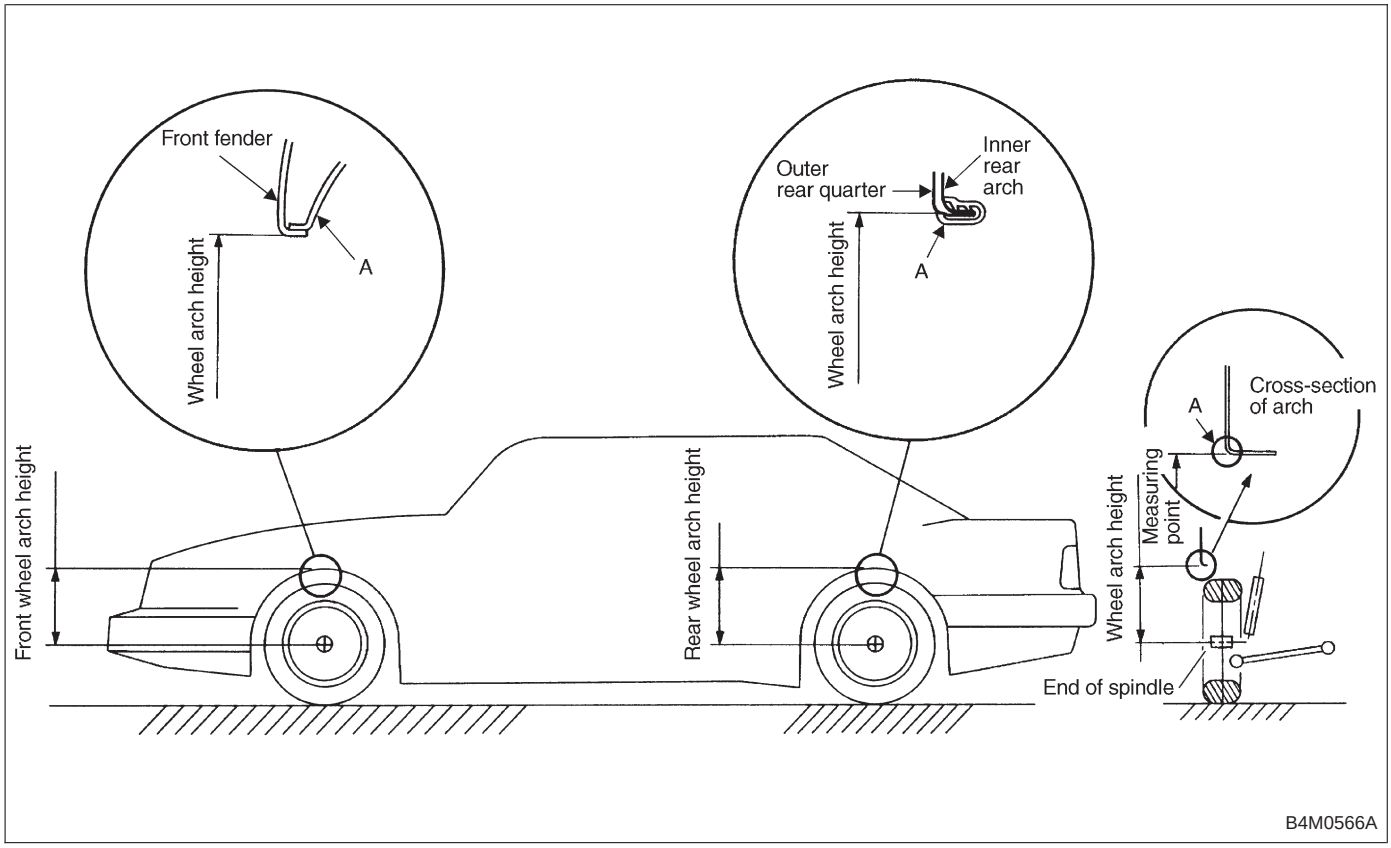

Vehicles		Specified wheel arch height mm (in)	
		Front	Rear
Sedan	FWD	385^{+12}_{-24} ($15.16^{+0.47}_{-0.94}$)	369^{+12}_{-24} ($14.53^{+0.47}_{-0.94}$)
	AWD	385^{+12}_{-24} ($15.16^{+0.47}_{-0.94}$)	369^{+12}_{-24} ($14.53^{+0.47}_{-0.94}$)
Wagon	FWD	385^{+12}_{-24} ($15.16^{+0.47}_{-0.94}$)	379^{+12}_{-24} ($14.92^{+0.47}_{-0.94}$)
	AWD	385^{+12}_{-24} ($15.16^{+0.47}_{-0.94}$)	379^{+12}_{-24} ($14.92^{+0.47}_{-0.94}$)
OUTBACK	AWD	420^{+12}_{-24} ($16.54^{+0.47}_{-0.94}$)	419^{+12}_{-24} ($16.50^{+0.47}_{-0.94}$)

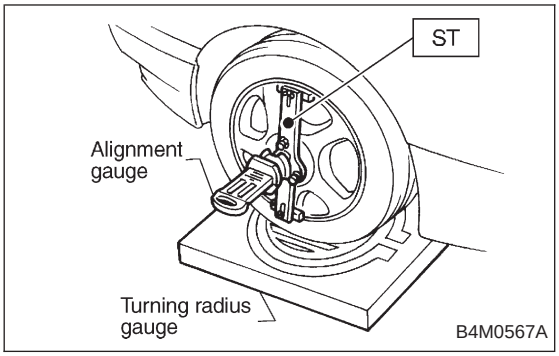

2. CAMBER AND CASTER

● Inspection

1) Place front wheel on turning radius gauge. Make sure ground contacting surfaces of front and rear wheels are set at the same height.
2) Set ST into the center of the wheel, and then install the wheel alignment gauge.

ST 927380000 ADAPTER

NOTE:
Refer to the “SPECIFICATIONS AND SERVICE DATA” for the camber and caster values.

● Front camber adjustment

1) Loosen two self-locking nuts located at lower front portion of strut.

CAUTION:
● When adjusting bolt needs to be loosened or tightened, hold its head with a wrench and turn self-locking nut.
● Discard loosened self-locking nut and replace with a new one.

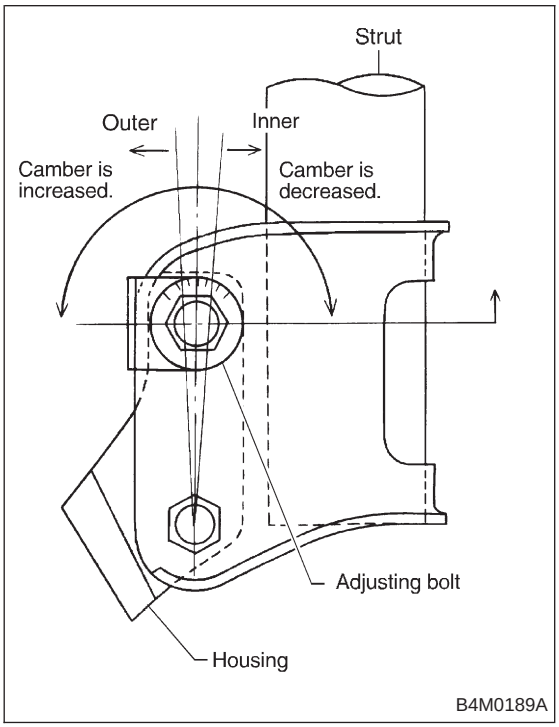

2) Turn camber adjusting bolt so that camber is set at the specification.

NOTE:
Moving the adjusting bolt by one scale graduation changes camber by approximately 0°10′.

	Left side	Right side
Camber is increased.	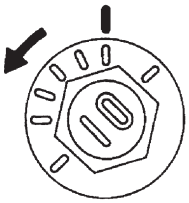 Rotate counterclockwise. B4M0190	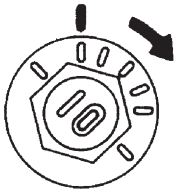 Rotate clockwise. B4M0350
Camber is decreased.	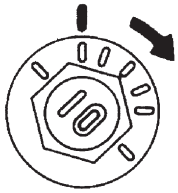 Rotate clockwise. B4M0350	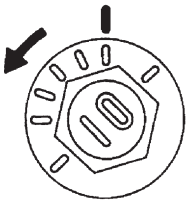 Rotate counterclockwise. B4M0190

3) Tighten the two self-locking nuts.

Tightening torque:
152±20 N·m (15.5±2.0 kg-m, 112±14 ft-lb)

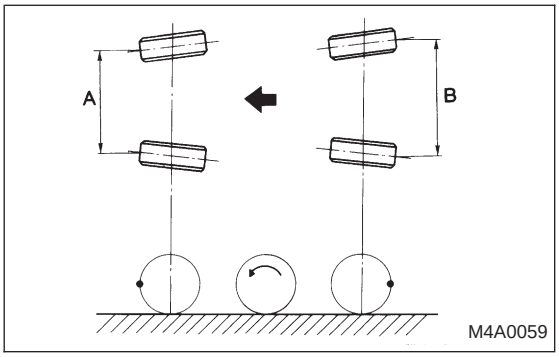

3. FRONT WHEEL TOE-IN

● Inspection

1) Using a toe gauge, measure front wheel toe-in.

Toe-in: 0±3 mm (0±0.12 in)

2) Mark rear sides of left and right tires at height corresponding to center of spindles and measure distance “B” between marks.

3) Move vehicle forward so that marks line up with front sides at height corresponding to center of spindles.

4) Measure distance “A” between left and right marks. Toe-in can then be obtained by the following equation:

B − A = Toe-in

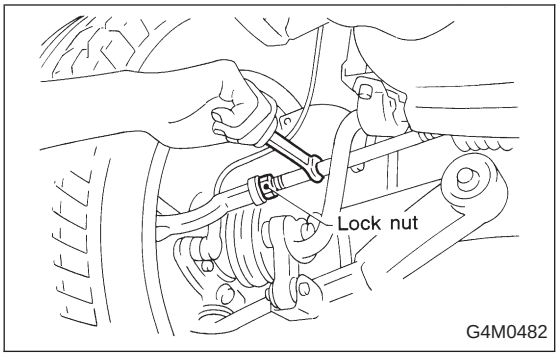

● Adjustment
1) Loosen the left and right side steering tie-rods lock nuts.
2) Turn the left and right tie rods equal amounts until the toe-in is at the specification.
Both the left and right tie-rods are right-hand threaded. To increase toe-in, turn both tie-rods clockwise equal amounts (as viewed from the inside of the vehicle).
3) Tighten tie-rod lock nut.

Tightening torque:
83±5 N·m (8.5±0.5 kg-m, 61.5±3.6 ft-lb)

CAUTION:
Correct tie-rod boot, if it is twisted.

NOTE:
Check the left and right wheel steering angle is within specifications.

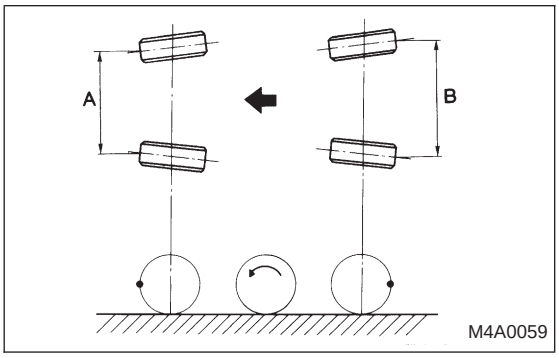

4. REAR WHEEL TOE-IN (FWD MODEL)

● Inspection
1) Using a toe-in gauge, measure rear wheel toe-in.

Toe-in: 0±3 mm (0±0.12 in)

2) Mark rear sides of left and right tires at height corresponding to center of spindles and measure distance “B” between marks.
3) Move vehicle forward so that marks line up with front sides at height corresponding to center of spindles.
4) Measure distance “A” between left and right marks. Toe-in can then be obtained by the following equation:

B − A = Toe-in

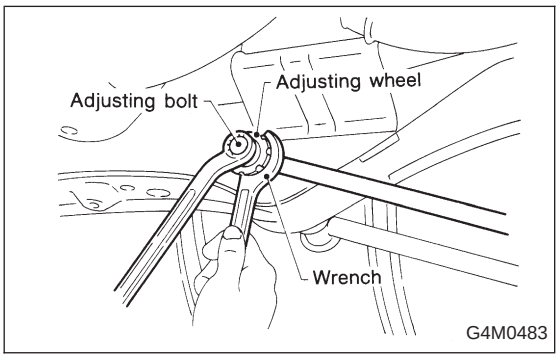

● Adjustment
1) Remove cap from lateral link and loosen self-locking nut.

CAUTION:
● When loosening or tightening adjusting bolt, hold the bolt head and loosen self-locking nut.
● Replace self-locking nut with a new one.

2) Using two wrenches, turn adjusting wheel and adjusting bolt equally in opposite directions so that toe-in is at the specification.

	Left side	Right side
Toe-in is increased.	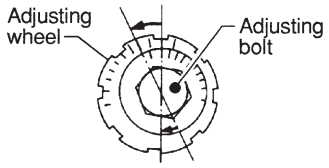 Turn adjusting wheel counterclockwise and adjusting bolt clockwise. B4M0191A	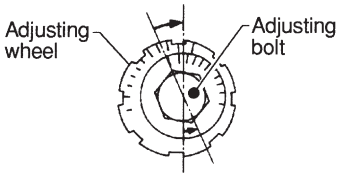 Turn adjusting wheel clockwise and adjusting bolt counterclockwise. B4M0351A
Toe-in is decreased.	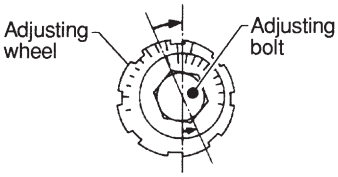 Turn adjusting wheel clockwise and adjusting bolt counterclockwise. B4M0351A	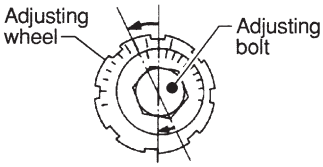 Turn adjusting wheel counterclockwise and adjusting bolt clockwise. B4M0191A

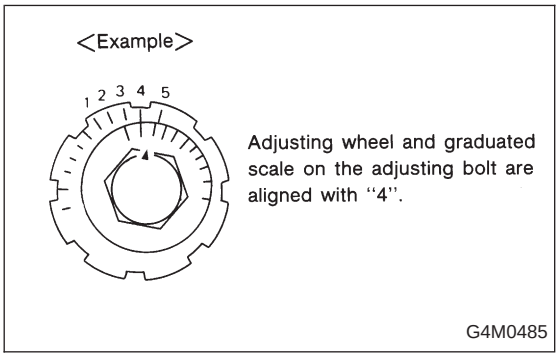

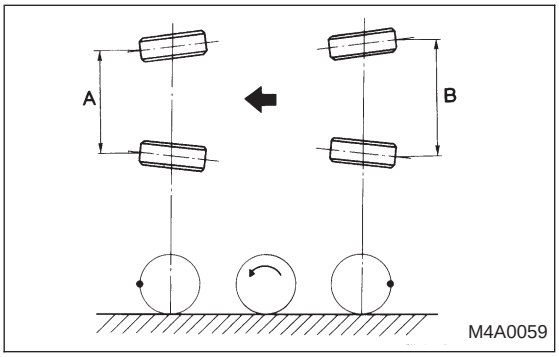

NOTE:
- When left and right wheels are adjusted for toe-in at the same time, moving one scale graduation changes toe-in by approximately 4 mm (0.16 in).
- Turn adjusting wheel and adjusting bolt equally in opposite directions so that same scale graduations are positioned directly above center of the adjusting bolt.

3) Tighten self-locking nut.

Tightening torque:
137±20 N·m (14±2 kg-m, 101±14 ft-lb)

5. REAR WHEEL TOE-IN (AWD MODEL)

- Inspection

1) Using a toe-in gauge, measure rear wheel toe-in.

Toe-in: 0±3 mm (0±0.12 in)

2) Mark rear sides of left and right tires at height corresponding to center of spindles and measure distance “B” between marks.
3) Move vehicle forward so that marks line up with front sides at height corresponding to center of spindles.
4) Measure distance “A” between left and right marks. Toe-in can then be obtained by the following equation:

B − A = Toe-in

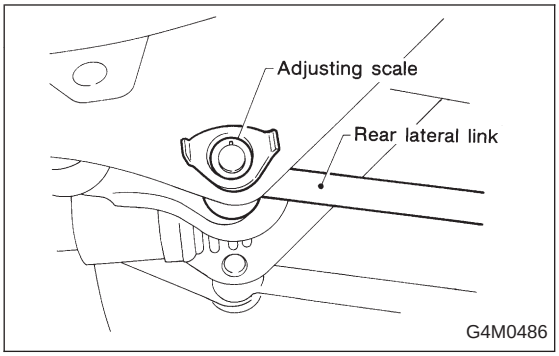

● Adjustment

1) Loosen self-locking nut on inner side of rear lateral link.

CAUTION:

● When loosening or tightening adjusting bolt, hold bolt head and turn self-locking nut.

● Discard loosened self-locking nut and replace with a new one.

2) Turn adjusting bolt head until toe-in is at the specification.

	Left side	Right side
Toe-in is increased.	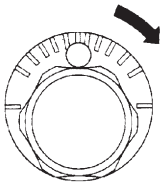 Rotate clockwise. B4M0192	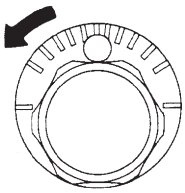 Rotate counterclockwise. B4M0352
Toe-in is decreased.	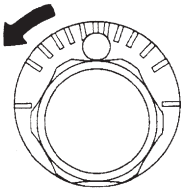 Rotate counterclockwise. B4M0352	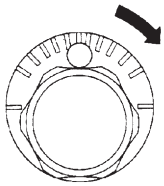 Rotate clockwise. B4M0192

NOTE:
When left and right wheels are adjusted for toe-in at the same time, the movement of one scale graduation changes toe-in by approximately 3 mm (0.12 in).

3) Tighten self-locking nut.

Tightening torque:
98±15 N·m (10±1.5 kg-m, 72±11 ft-lb)

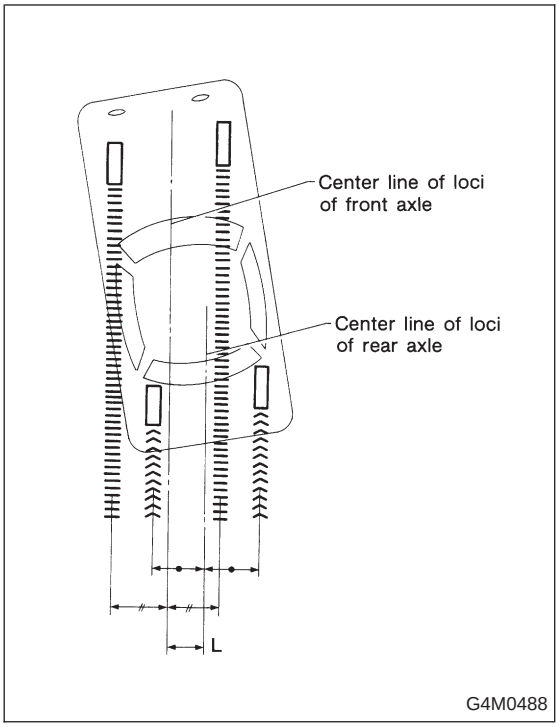

6. THRUST ANGLE

● Inspection

1) Position vehicle on a level surface.
2) Move vehicle 3 to 4 meters directly forward.
3) Determine locus of both front and rear axles.
4) Measure distance “L” between center line of loci of the axles.

<For reference>

· Thrust angle is less than 20’ when “L” is equal to or less than 15 mm (0.59 in).

● Adjustment

Make thrust angle adjustments by turning toe-in adjusting bolts of rear suspension equally in the same direction.

NOTE:
On FWD models, turn adjusting wheels one by one, by the some amount in the opposite direction of the adjusting bolts.

<For reference>

· When one rear wheel is adjusted in a toe-in direction, adjust the other rear wheel equally in toe-out direction, in order to make thrust angle adjustment.

· When left and right adjusting bolts are turned incrementally by one graduation in the same direction, the thrust angle of the AWD model will change approximately 10’ [“L” is almost equal to 7.5 mm (0.295 in)] and the thrust angle of the FWD model will change approximately 12’ [“L” is almost equal to 9 mm (0.35 in)].

Thrust angle:
0°±20′

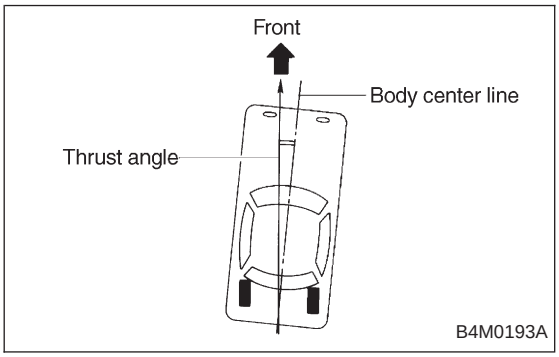

NOTE:
Thrust angle refers to a mean value of left and right rear wheel toe angles in relation to vehicle body center line. Vehicle is driven straight in the thrust angle direction while swinging in the oblique direction depending on the degree of the mean thrust angle.

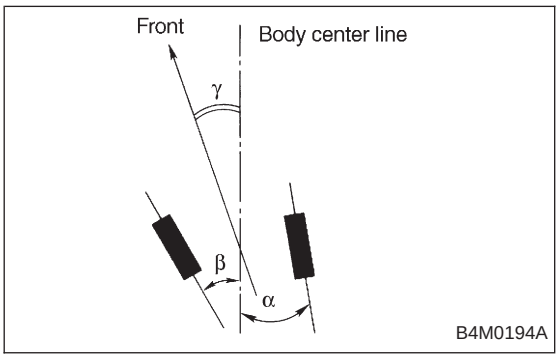

Thrust angle: r

$$r = \frac{\alpha - \beta}{2}$$

α: Right rear wheel toe angle
β: Left rear wheel toe angle

NOTE:
Here, use only positive toe-in values from each wheel to substitute for α and β in the equation.

7. STEERING ANGLE

● Inspection

1) Place vehicle on a turning radius gauge.
2) While depressing brake pedal, turn steering wheel fully to the left and right. With steering wheel held at each fully turned position, measure both the inner and outer wheel steering angle.

Steering angle:
Inner wheel 37.6°±1.5°
Outer wheel 32.6°±1.5°

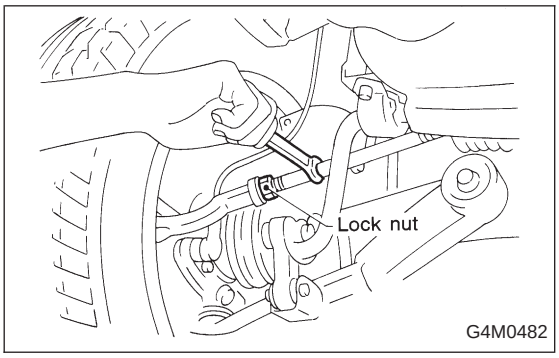

● Adjustment

Turn tie-rod to adjust steering angle of both inner and outer wheels.

CAUTION:
- **Check toe-in.**
- **Correct boot if it is twisted.**