# 11. Rear Crossmember (AWD Model)

## A: REMOVAL

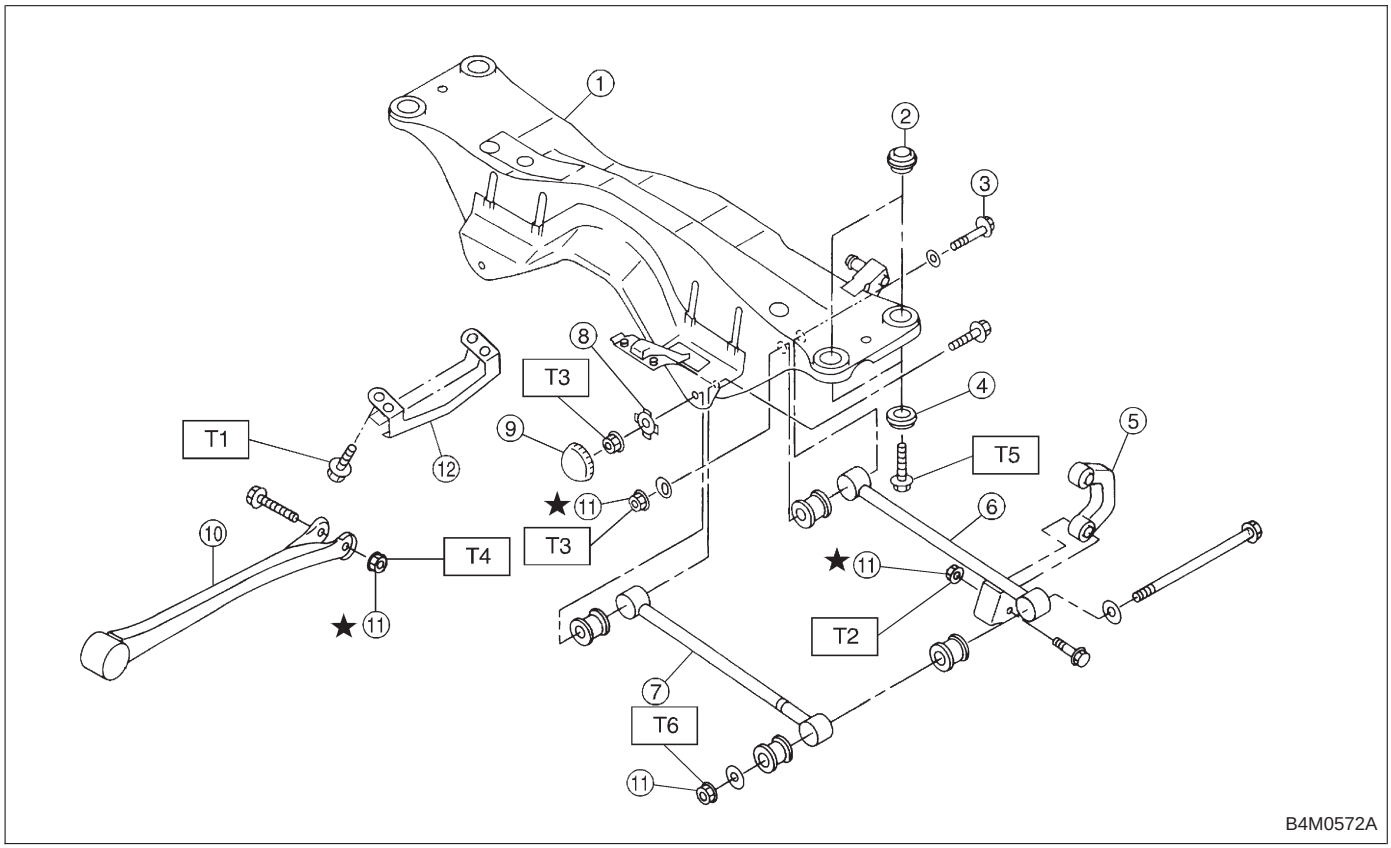


① Crossmember
② Floating bushing
③ Adjusting bolt
④ Stopper
⑤ Stabilizer link
⑥ Rear lateral link
⑦ Front lateral link
⑧ Washer
⑨ Cap (Protection)
⑩ Trailing link
⑪ Self-locking nut
⑫ Crossmember reinforcement lower (Sedan model only)

***Tightening torque: N·m (kg-m, ft-lb)***
***T1: 25±7 (2.5±0.7, 18.1±5.1)***
***T2: 44±6 (4.5±0.6, 32.5±4.3)***
***T3: 98±15 (10.0±1.5, 72±11)***
***T4: 113±15 (11.5±1.5, 83±11)***
***T5: 127±20 (13.0±2.0, 94±14)***
***T6: 137±20 (14.0±2.0, 101±14)***

**CAUTION:**
**Do not subject A.B.S. sensor harness to excessive tension. (A.B.S. equipped models.)**

1) Separate front exhaust pipe and rear exhaust pipe.
2) Remove rear exhaust pipe and muffler.
3) Remove crossmember reinforcement lower. (Sedan model only)
4) Remove rear differential. <Ref. to 3-4 [W2B0].>

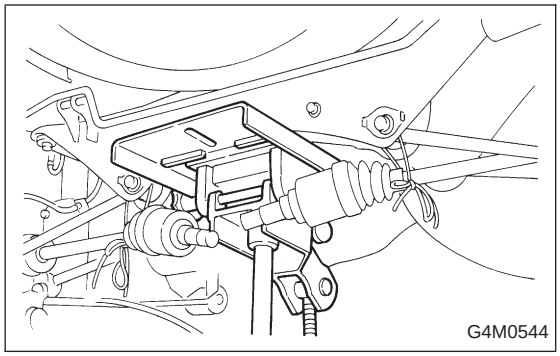


5) Place transmission jack under rear crossmember.

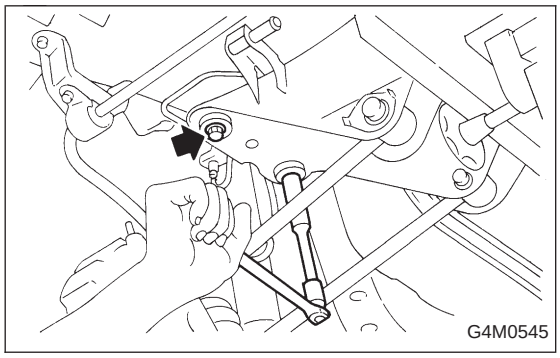


6) Remove bolts securing crossmember to vehicle body, and remove crossmember.

7) Scribe an alignment mark on rear lateral link cam bolt and crossmember.
8) Remove four bolts securing front and rear lateral links to crossmember by loosening nuts.

## B: INSPECTION

Check removed parts for damage and cracks, and correct or replace if defective.

## C: INSTALLATION

1) Install in reverse order of removal.
2) For installation and tightening torque of rear differential, refer to 3-4 [W2F0].

**CAUTION:**
**Always tighten rubber bushing when wheels are in full contact with the ground and vehicle is at curb weight condition.**

NOTE:
Check wheel alignment and adjust if necessary.