10. Rear Crossmember (FWD Model)

A: REMOVAL

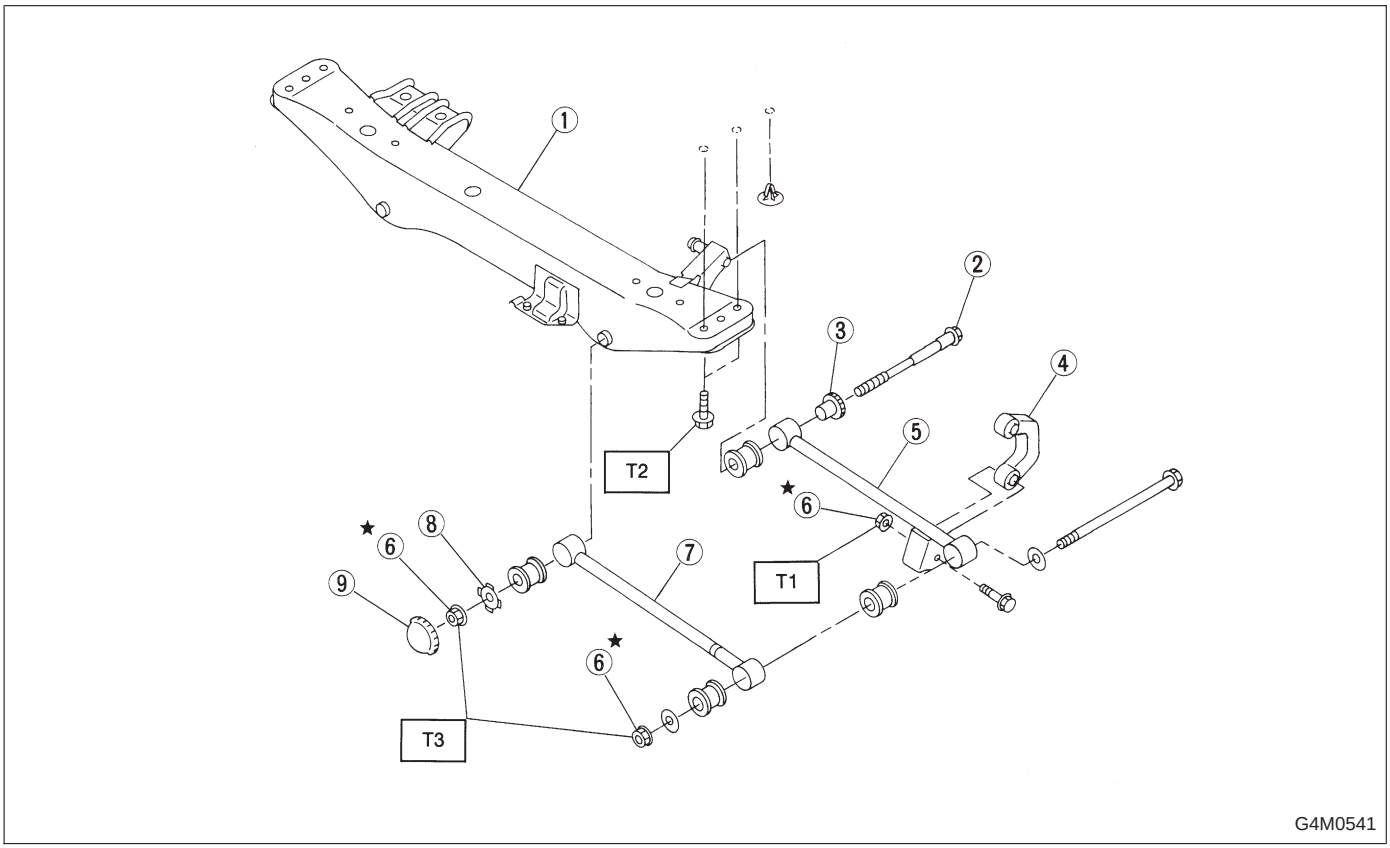

① Crossmember
② Adjusting bolt
③ Adjusting wheel
④ Stabilizer link
⑤ Rear lateral link
⑥ Self-locking nut
⑦ Front lateral link
⑧ Washer
⑨ Cap (Protection)

Tightening torque: N·m (kg-m, ft-lb)
T1: 44±6 (4.5±0.6, 32.5±4.3)
T2: 127±20 (13.0±2.0, 94±14)
T3: 137±20 (14.0±2.0, 101±14)

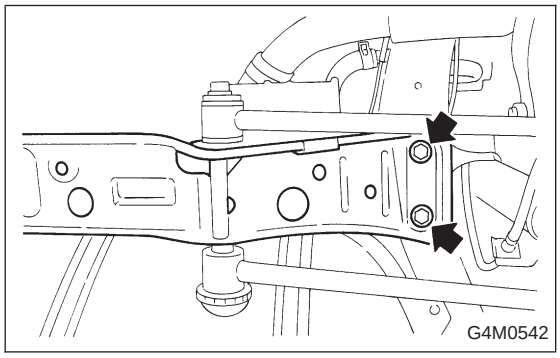

1) Disconnect lateral links from housing.
2) Remove rear exhaust pipe and muffler.
3) Remove heat-shield cover.
4) Remove four bolts securing crossmember to body.

B: INSPECTION

Check removed parts for wear, damage and cracks, and correct or replace if defective.

C: INSTALLATION

Installation is in reverse order of removal procedure.

CAUTION:

- **Discard loosened self-locking nut and replace with a new one.**
- **Always tighten nut (not adjusting bolt), when tightening adjusting bolt.**
- **Always tighten rubber bushing when wheels are in full contact with the ground and vehicle is at curb weight condition.**

NOTE:
Check wheel alignment and adjust if necessary.