9. Rear Strut

A: REMOVAL

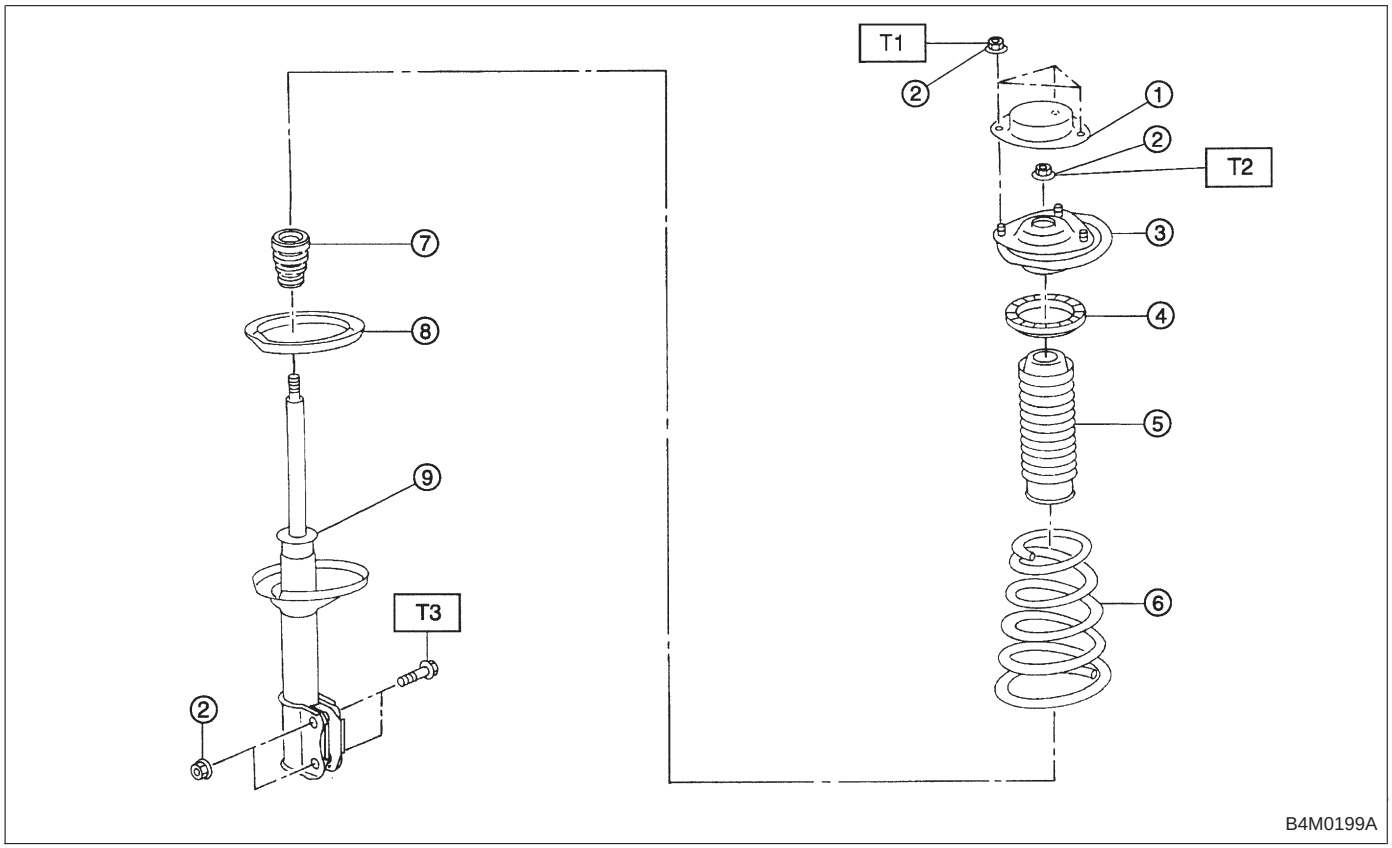

① Strut mount cap
② Self-locking nut
③ Strut mount
④ Rubber seat upper
⑤ Dust cover
⑥ Coil spring
⑦ Helper
⑧ Rubber seat lower
⑨ Damper strut

Tightening torque: N·m (kg-m, ft-lb)
T1: 20±6 (2.0±0.6, 14.5±4.3)
T2: 59±10 (6.0±1.0, 43±7)
T3: 196^{+39}_{-10} ($20.0^{+4.0}_{-1.0}$, 145^{+29}_{-7})

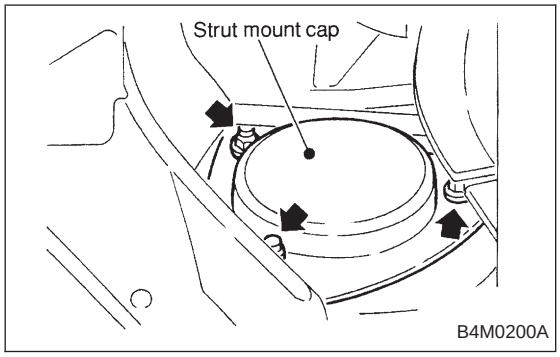

1) Depress brake pedal and secure it in that position using a wooden block, etc.
2) Remove rear seat cushion and backrest. (Sedan)

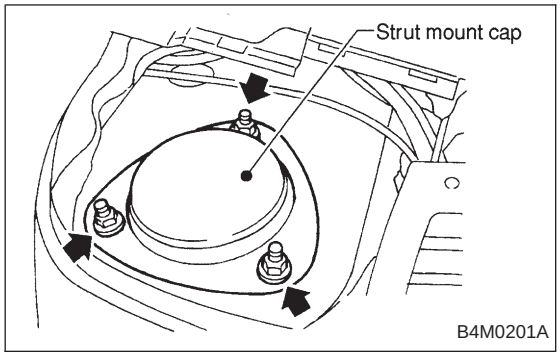

3) Remove strut cap of rear quarter trim. (Wagon)
4) Loosen rear wheel nuts.
5) Jack-up vehicle, support it with safety stands (rigid racks) and remove rear wheels.
6) Remove brake hose clip.

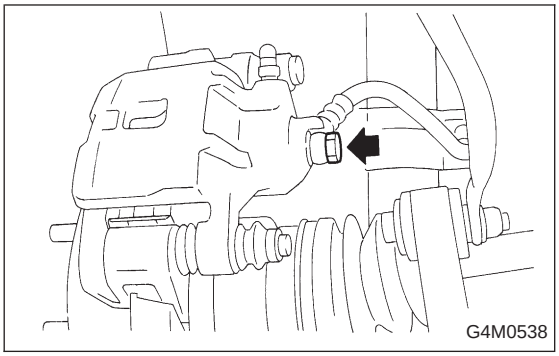

7) Models equipped with rear disc brakes:
Remove union bolt from brake caliper.
8) Models equipped with rear drum brakes:
Disconnect brake hose from brake pipe from strut, and disconnect brake pipe from dram brake.

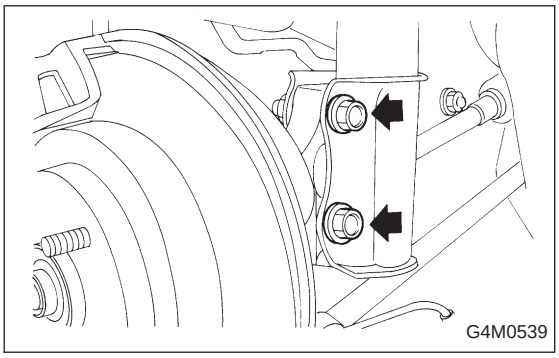

9) Remove bolts which secure rear strut to housing.
10) Remove nuts securing strut mount to body.
11) Remove strut mount cap.

B: DISASSEMBLY

For disassembly of rear strut, refer to procedures outlined under front strut as a guide.

<Ref. to 4-1 [W4B0].>

C: INSPECTION

Refer to Front Strut [W4C0] as a guide for inspection procedures.

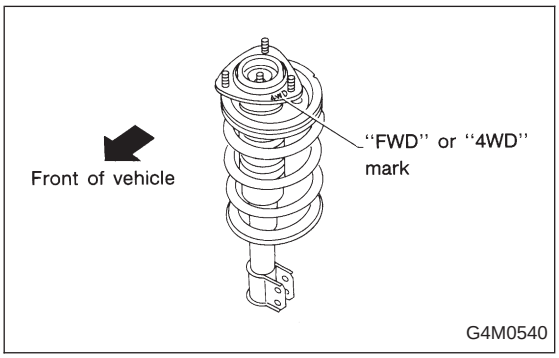

D: ASSEMBLY

Refer to Front Strut [W4D0] as a guide for assembly procedures.

CAUTION:

- **Install rear strut with "FWD" or "4WD" mark on strut mount facing outside of vehicle body.**
- **Insert the protrusion of lower rubber seat into the strut spring seat hole.**

E: INSTALLATION

1) Install strut mount cap.
2) Tighten self-locking nut used to secure strut mount to vehicle body.

CAUTION:
Use a new self-locking nut.

NOTE:
Tighten strut mount and cap as a unit.

Tightening torque:
20±6 N·m (2.0±0.6 kg-m, 14.5±4.3 ft-lb)

3) Tighten bolts securing rear strut to housing.

Tightening torque:
196^{+39}_{-10} N·m ($20.0^{+4.0}_{-1.0}$ kg-m, 145^{+29}_{-7} ft-lb)

CAUTION:

Use a new self-locking nut.

4) Models with rear disc brakes:
Tighten brake hose union bolt on brake caliper.

Tightening torque:
18±3 N·m (1.8±0.3 kg-m, 13.0±2.2 ft-lb)

Models with rear drum brakes:
Connect brake hose to brake pipe.

Tightening torque:
15^{+3}_{-2} N·m ($1.5^{+0.3}_{-0.2}$ kg-m, $10.8^{+2.2}_{-1.4}$ ft-lb)

5) Insert brake hose clip between brake hose and lower side of strut.

CAUTION:
- **Check that hose clip is positioned properly.**
- **Check brake hose for twisting, or excessive tension.**
- **Models equipped with A.B.S.:**

Do not subject A.B.S. sensor harness to excessive tension.

6) Be sure to bleed air from brake system.

7) Lower vehicle and tighten wheel nut.

Tightening torque:
88±10 N·m (9±1 kg-m, 65±7 ft-lb)

8) Sedan:
Install rear seat backrest and rear seat cushion.
Wagon:
Install strut cap of rear quarter trim.
NOTE:
Check wheel alignment and adjust if necessary.