7. Rear Trailing Link

A: REMOVAL

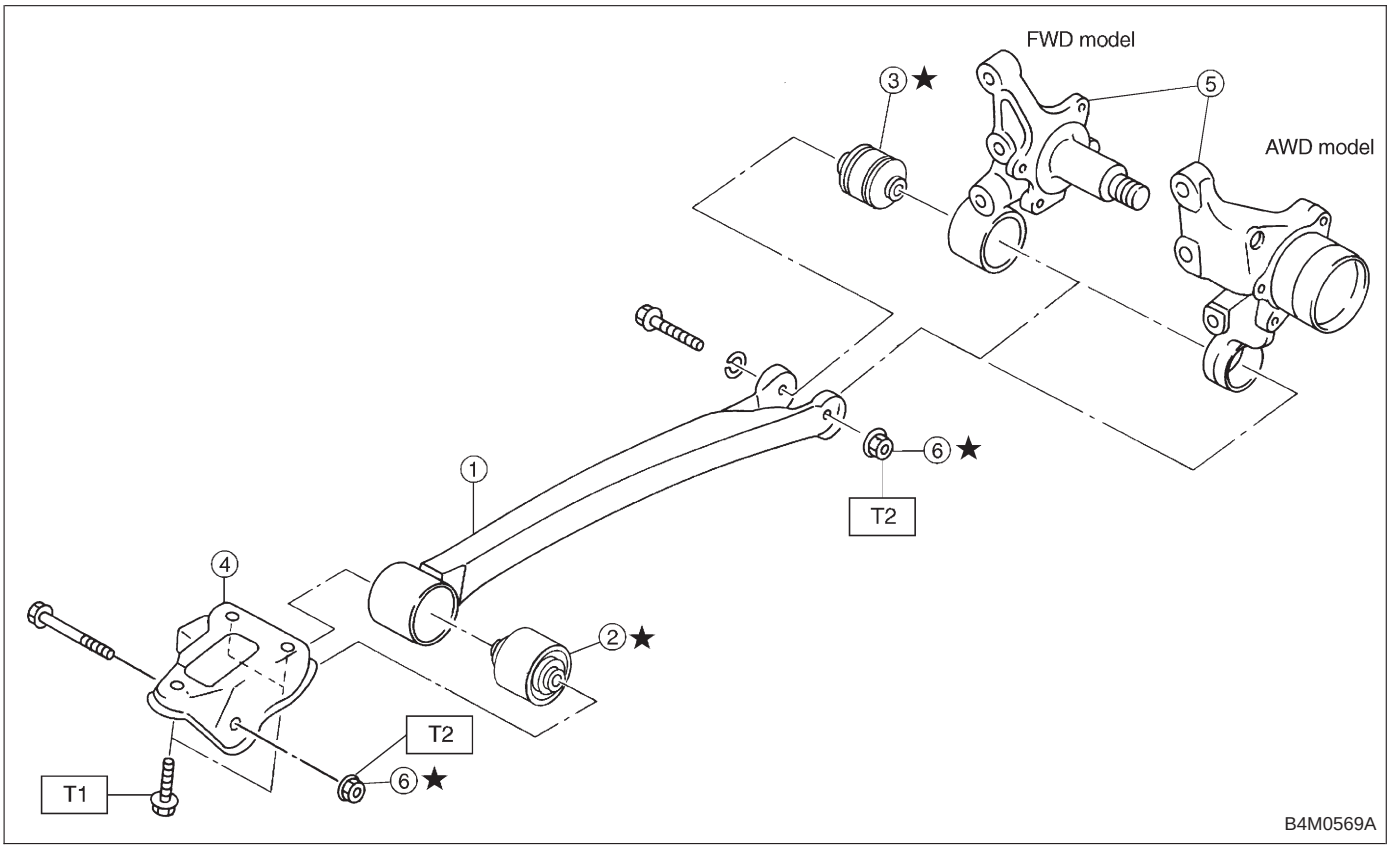

① Trailing link
② Front bushing
③ Rear bushing
④ Bracket
⑤ Housing
⑥ Self-locking nut

Tightening torque: N·m (kg-m, ft-lb)
T1: 98±20 (10.0±2.0, 72±14)
T2: 113±15 (11.5±1.5, 83±11)

1) Loosen rear wheel nuts.
2) Lift-up vehicle, support it with safety stands (rigid racks) and remove rear wheels.
3) Remove both rear parking brake clamp and A.B.S. sensor harness. (A.B.S. equipped models.)

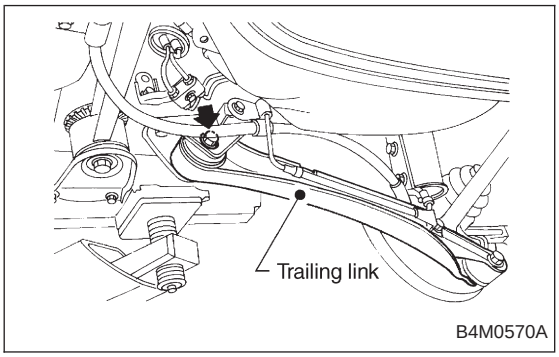

4) Remove bolt which secure trailing link to trailing link bracket.
5) Remove bolt which secure trailing link to rear housing.

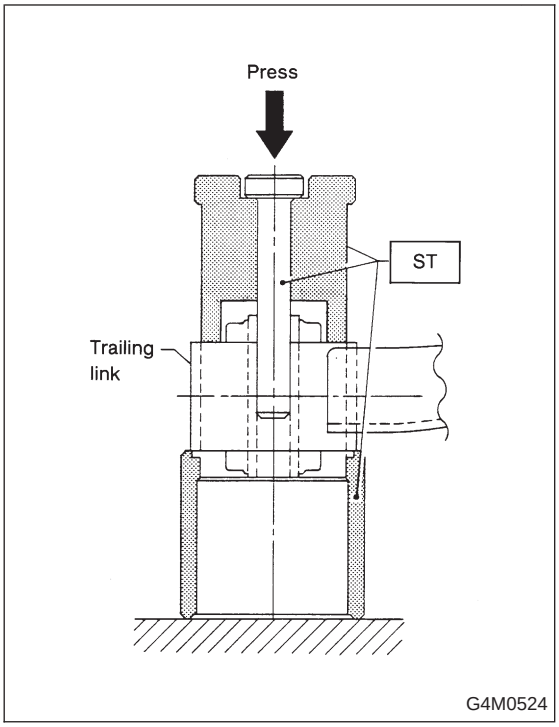

B: DISASSEMBLY

1. FRONT BUSHING

Using ST, press front bushing out of place.

ST 927720000 INSTALLER & REMOVER SET

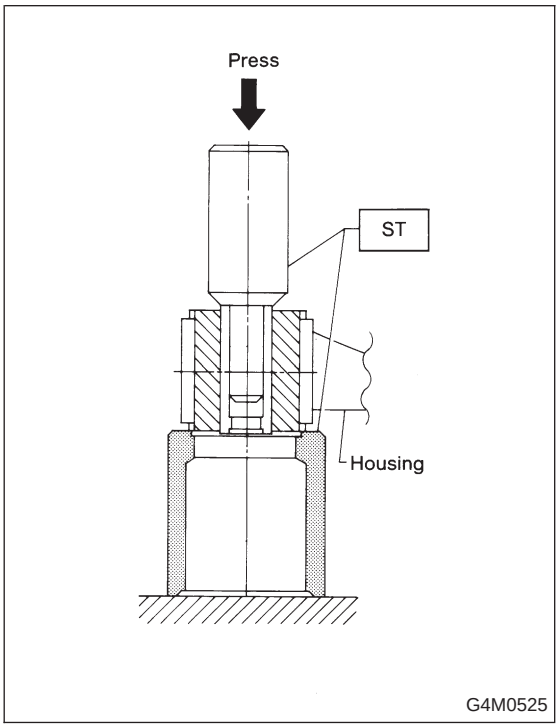

2. REAR BUSHING

1) Remove housing. Refer to “4-2 WHEELS AND AXLES” for removal procedures.
2) Using ST, press rear bushing out of place.

ST 927730000 INSTALLER & REMOVER SET

C: INSPECTION

Check trailing links for bends, corrosion or damage.

D: ASSEMBLY

To assemble, reverse above disassembly procedures.

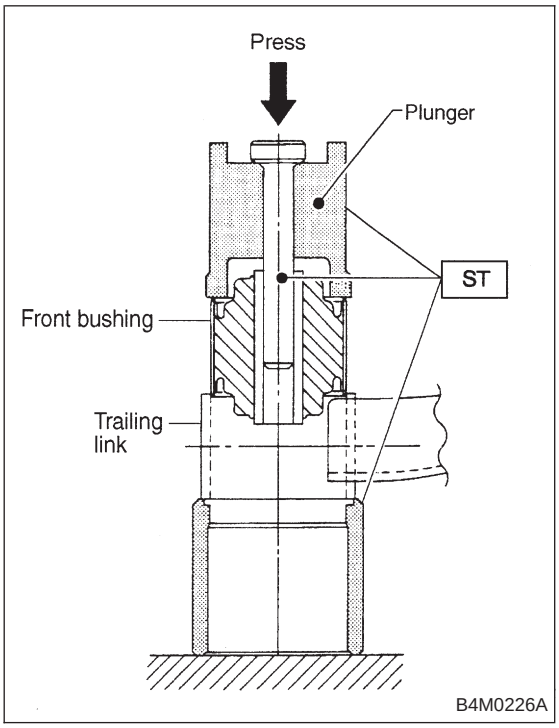

1. FRONT BUSHING

Using ST, press bushing into trailing link.

ST 927720000 INSTALLER & REMOVER SET

CAUTION:
When installing bushing, turn ST plunger upside down and press it until plunger end surface contacts trailing link end surface.

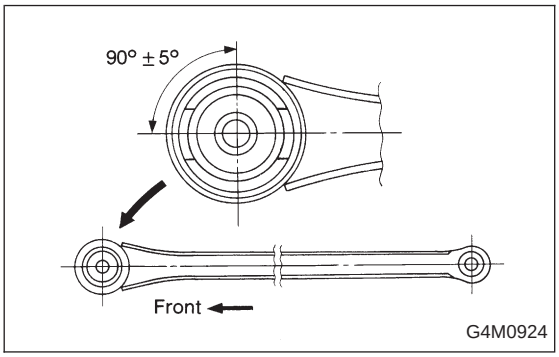

CAUTION:
Install front bushing in the proper direction, as shown in figure.

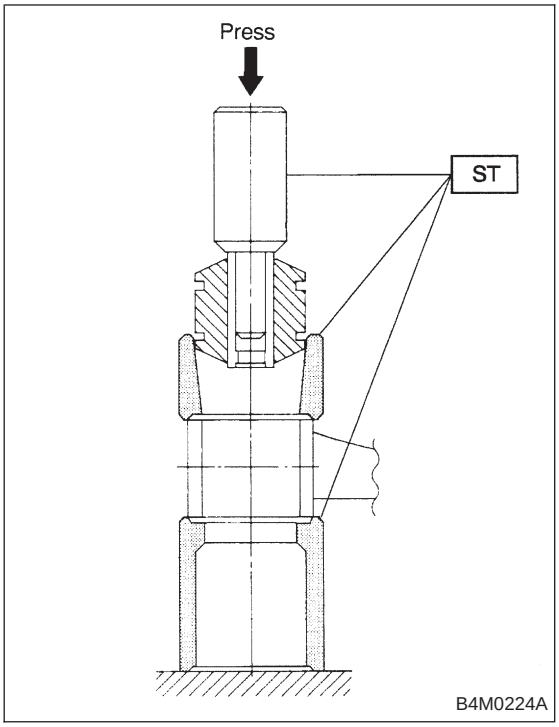

2. REAR BUSHING

1) Using ST, press bushing into trailing link.

ST 927730000 INSTALLER & REMOVER SET

NOTE:
If it is difficult to press bushing into trailing link, apply water-diluted TIRE LUBE to the inner surface of ST as a lubricant.

Specified lubricant:
TIRE LUBE : water = 1 : 3

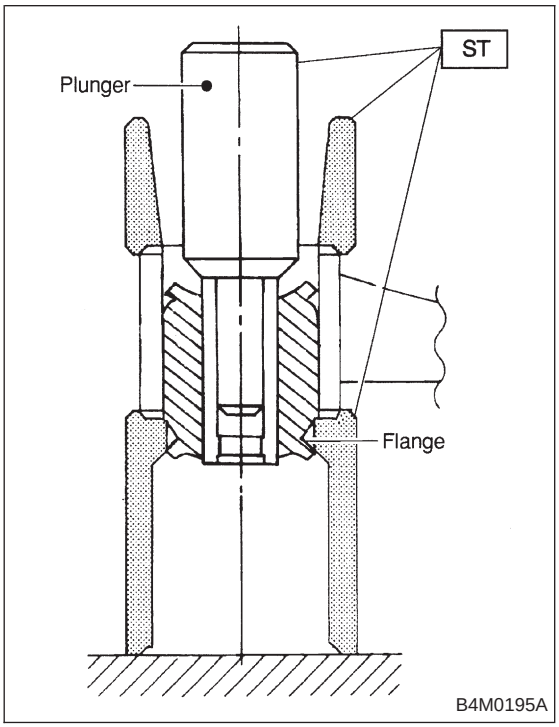

2) Press ST plunger until bushing flange protrudes beyond trailing link.

ST 927730000 INSTALLER & REMOVER SET

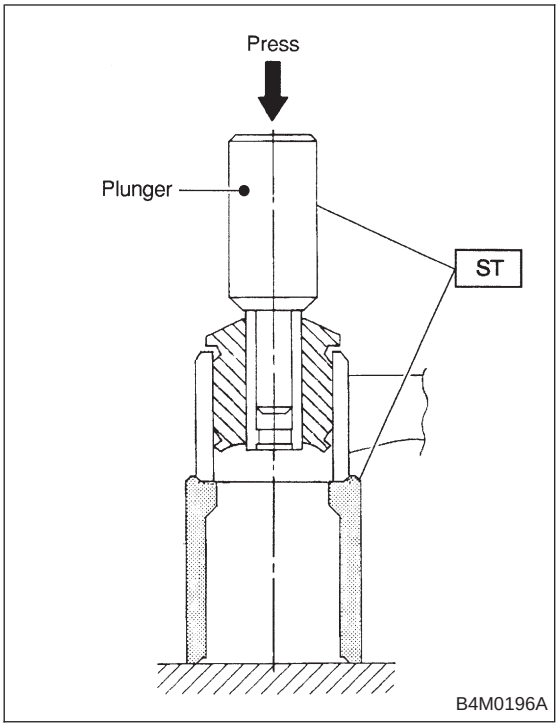

3) Turn trailing link upside down. Press ST plunger in the direction opposite that outlined in step 2) until bushing is correctly positioned in trailing link.

ST 927730000 INSTALLER & REMOVER SET

E: INSTALLATION

Installation is in the reverse order of removal.

CAUTION:
Always tighten rubber bushing location when wheels are in full contact with the ground and vehicle is at curb weight condition.

NOTE:
Check wheel alignment and adjust if necessary.