2. Propeller Shaft

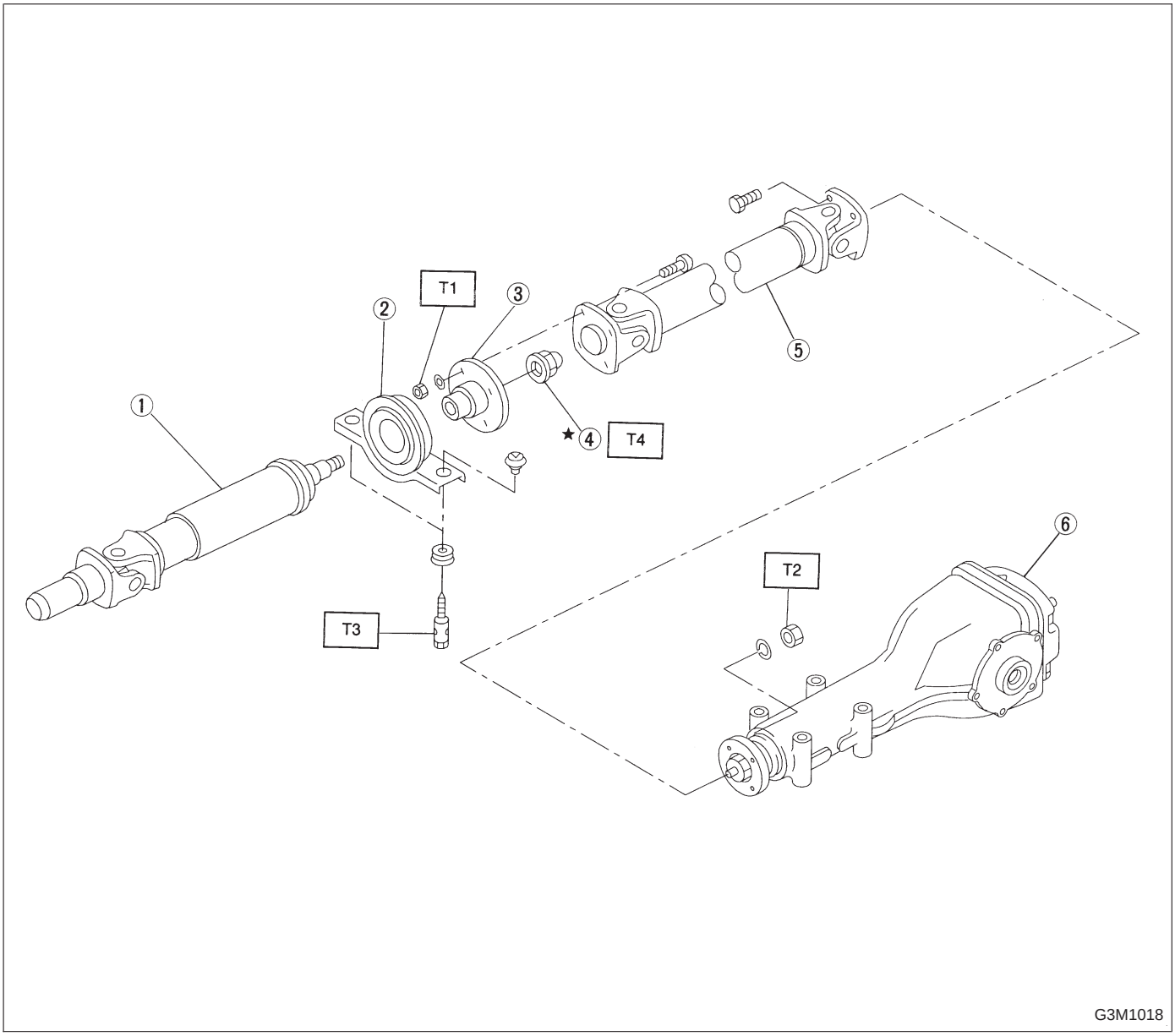

① Front propeller shaft
② Center bearing
③ Companion flange
④ Stake nut
⑤ Rear propeller shaft
⑥ Rear differential

Tightening torque: N·m (kg-m, ft-lb)
T1: 27.9±4.4 (2.85±0.45, 20.6±3.3)
T2: 31±8 (3.2±0.8, 23.1±5.8)
T3: 52±5 (5.3±0.5, 38.3±3.6)
T4: 270±25 (27.5±2.5, 199±18)