3. Rear Differential Assembly

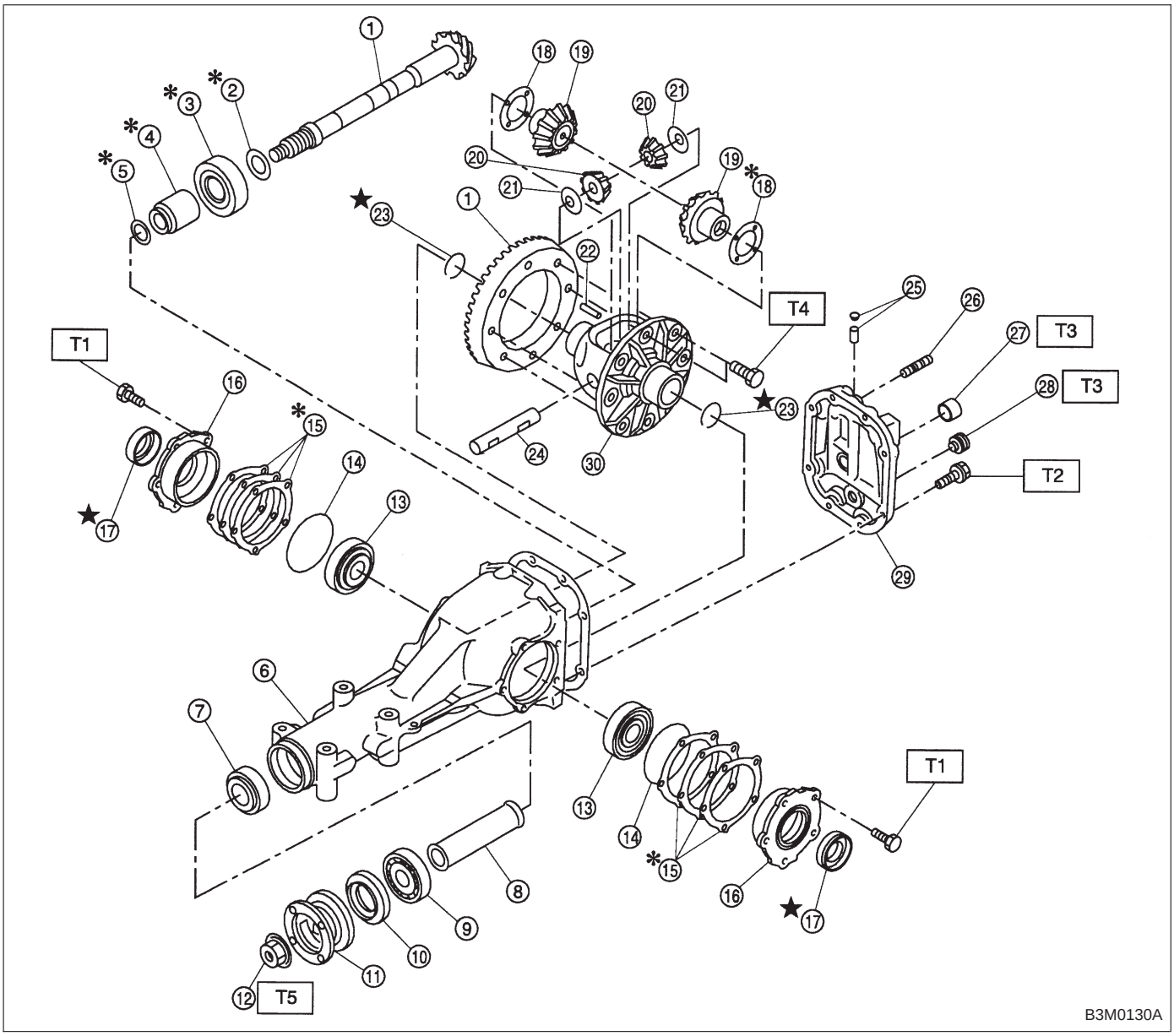

① Pinion crown gear set
② Pinion height adjusting washer
③ Rear bearing
④ Bearing preload adjusting spacer
⑤ Bearing preload adjusting washer
⑥ Differential carrier
⑦ Front bearing
⑧ Spacer
⑨ Pilot bearing
⑩ Front oil seal
⑪ Companion flange
⑫ Self-locking nut
⑬ Side bearing
⑭ O-ring
⑮ Side bearing retainer shim
⑯ Side bearing retainer
⑰ Side oil seal
⑱ Side gear thrust washer
⑲ Side gear
⑳ Pinion mate gear
㉑ Pinion mate gear washer
㉒ Pinion shaft lock pin
㉓ Circlip
㉔ Pinion mate shaft
㉕ Air breather cap
㉖ Stud bolt
㉗ Oil filler plug
㉘ Oil drain plug
㉙ Rear cover
㉚ Differential case

Tightening torque: N·m (kg-m, ft-lb)
T1: 10.3±1.5
(1.05±0.15, 7.6±1.1)
T2: 29.4±4.9
(3.00±0.50, 21.7±3.6)
T3: 44.1±3.9
(4.50±0.40, 32.5±2.9)
T4: 103.0±9.8
(10.50±1.00, 75.9±7.2)
T5: 181.4±14.7
(18.50±1.50, 133.8±10.8)