1. Rear Differential Mounting System

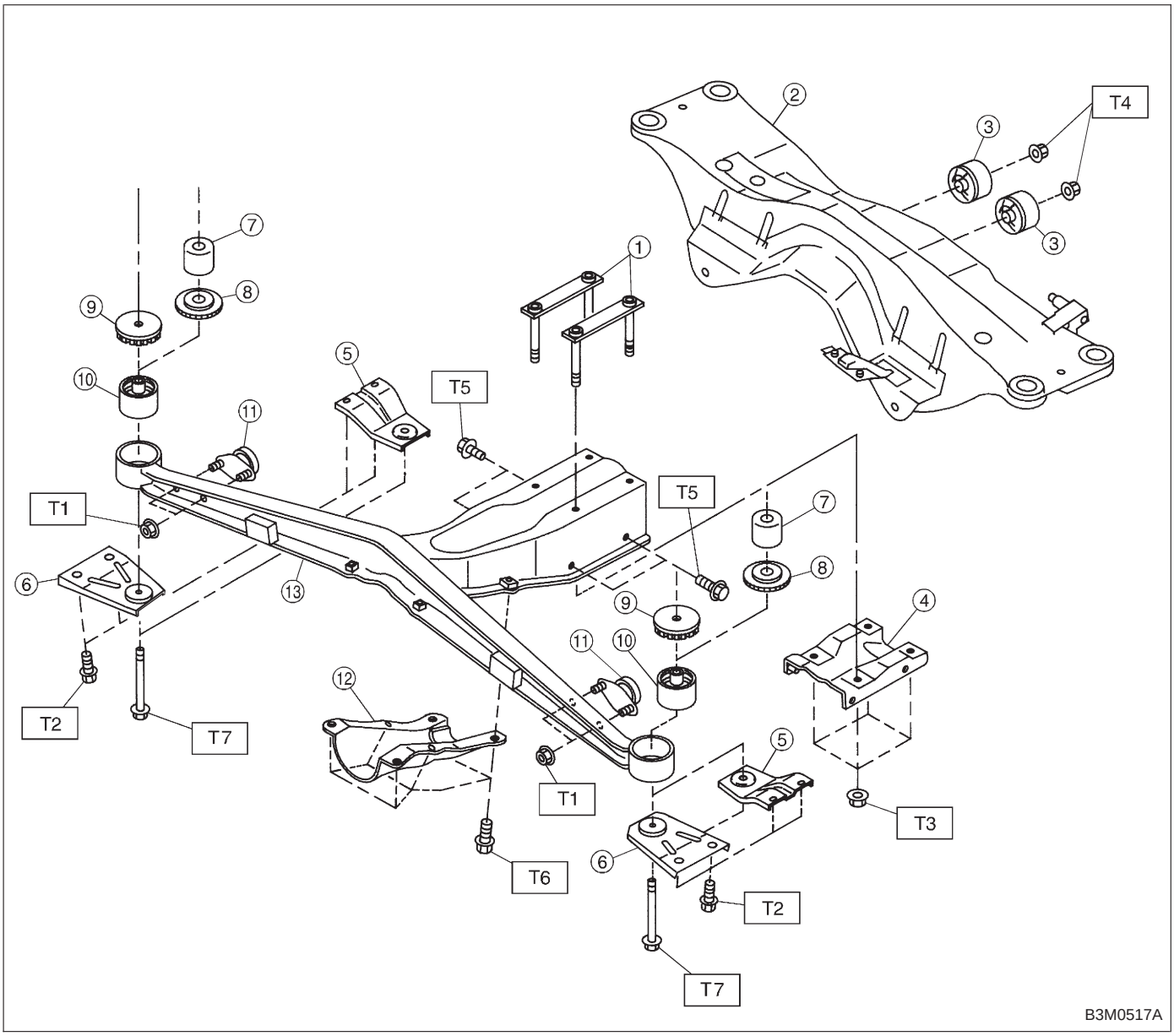

① Plate
② Crossmember
③ Rear bushing
④ Differential mount lower bracket
⑤ Differential mount bracket (OUTBACK model)
⑥ Differential mount bracket
⑦ Boss (OUTBACK model)
⑧ Stopper (OUTBACK model)
⑨ Stopper
⑩ Front bushing
⑪ Dynamic damper (2500 cc MT model)
⑫ Differential mount front cover
⑬ Differential front member

Tightening torque: N·m (kg-m, ft-lb)
T1: 20±5 (2.0±0.5, 14.5±3.6)
T2: 32±8 (3.3±0.8, 23.9±5.8)
T3: 64±8 (6.5±0.8, 47.0±5.8)
T4: 69±8 (7.0±0.8, 50.6±5.8)
T5: 69±10 (7.0±1.0, 51.0±7.2)
T6: 88±10 (9.0±1.0, 65.0±7.2)
T7: 98±10 (10.0±1.0, 72.0±7.2)