1. Propeller Shaft

A: ON-CAR SERVICE

Check the following points with propeller shaft installed in vehicle.

1) Joints and connections

Check for any looseness of yoke flange connecting bolts and center bearing retaining bolts.

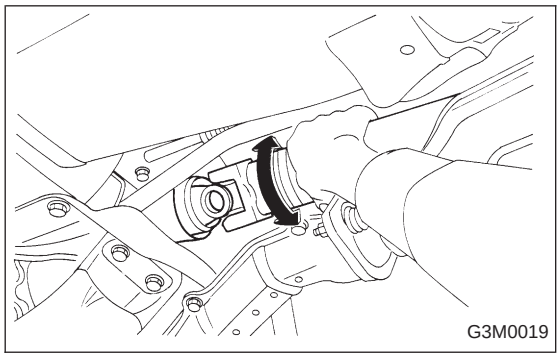

2) Splines and bearing locations

Turn propeller shaft by hand to see if abnormal free play exists at splines. Also move yokes to see if abnormal free play exists at spiders and bearings.

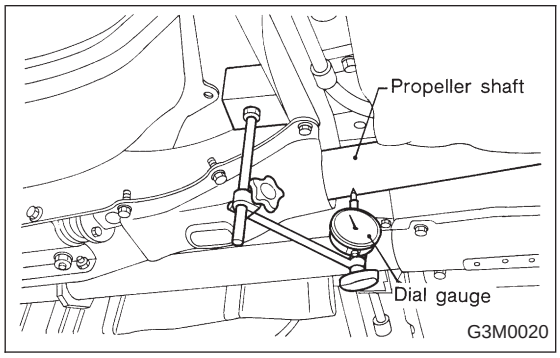

3) Runout of propeller shaft

Turn rear wheels by hand to check for “runout” of propeller shaft.

Runout:

Limit 0.6 mm (0.024 in)

NOTE:

Measure runout with a dial gauge at the center of front and rear propeller shaft tubes.

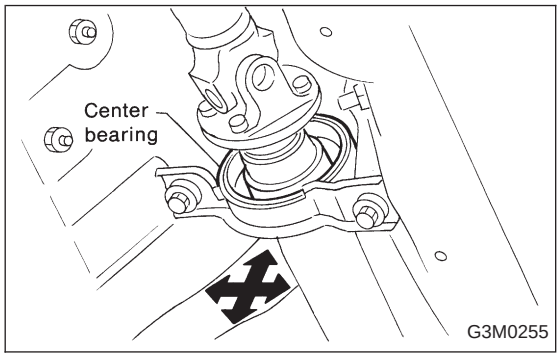

4) Center bearing free play

While holding propeller shaft near center bearing with your hand, move it up and down, and left and right to check for any abnormal bearing free play.

B: REMOVAL

NOTE:

Before removing propeller shaft, wrap metal parts with a cloth or rubber material.

1) Disconnect ground cable from battery.
2) Move selector lever or gear shift lever to “N”.
3) Release the parking brake.
4) Jack-up vehicle and support it with sturdy racks.
5) Remove rear exhaust pipe and muffler.

<Ref. to 2-9 [W2A0], [W3A0].>

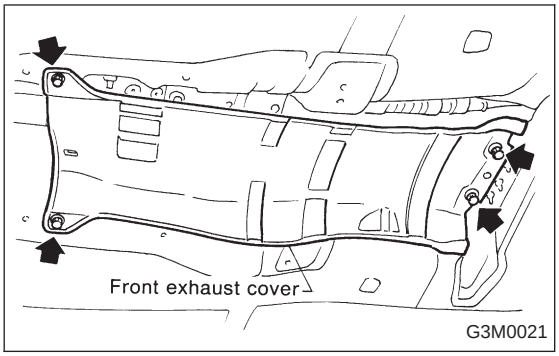

6) Remove front exhaust cover.

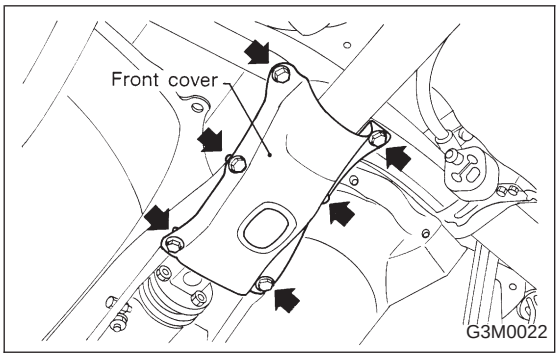

7) Remove differential mount front cover.

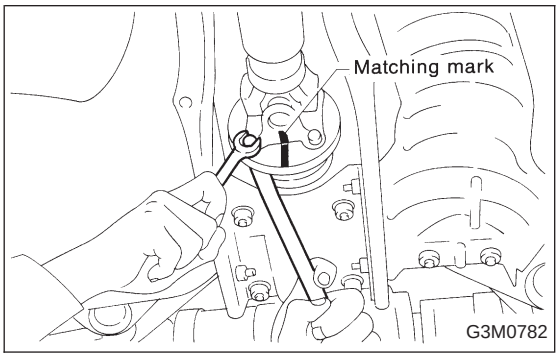

8) Remove the four bolts which hold propeller shaft to rear differential.

NOTE:
- Put matching mark on affected parts before removal.
- Remove all but one bolt.

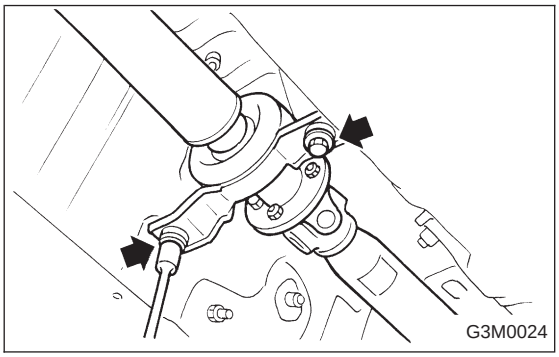

9) Remove the two bolts which hold center bearing to vehicle body.

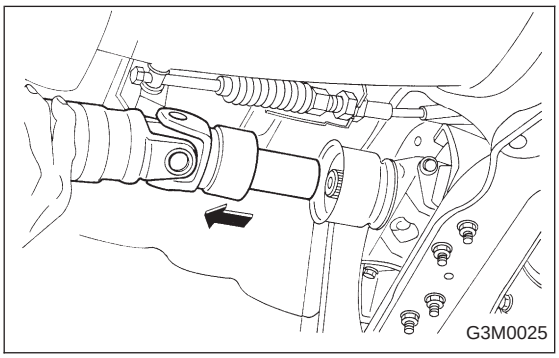

10) Remove propeller shaft from transmission.

CAUTION:
Be sure not to damage oil seals and the frictional surface of sleeve yoke.

NOTE:
- Be sure to use an empty oil can to catch oil flowing out when removing propeller shaft.
- Be sure to plug the opening in transmission after removal of propeller shaft.

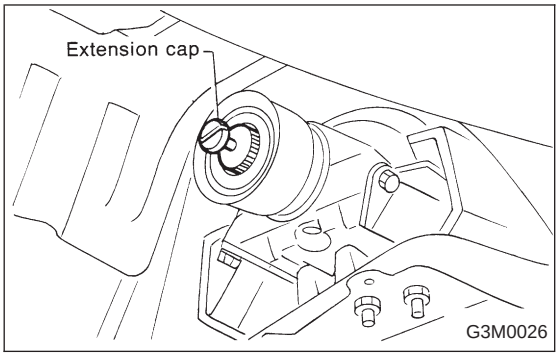

11) Install the extension cap to transmission.

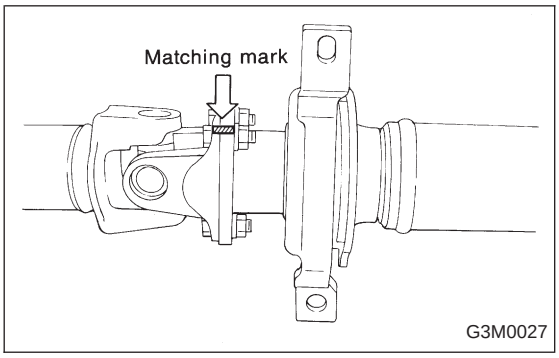

C: DISASSEMBLY

Before removing center bearing, check its condition. If it does not operate smoothly or if there is any free play or leakage, remove as follows:

1) Put matching marks on affected parts.

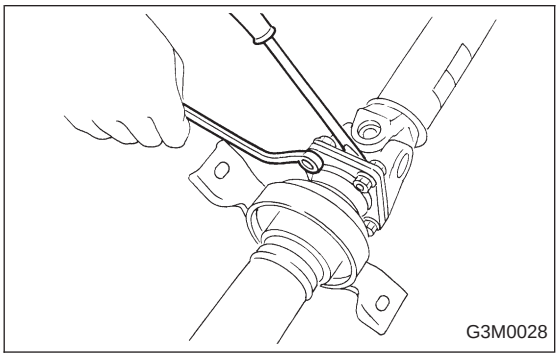

2) Remove bolts which hold front propeller shaft to rear propeller shaft.

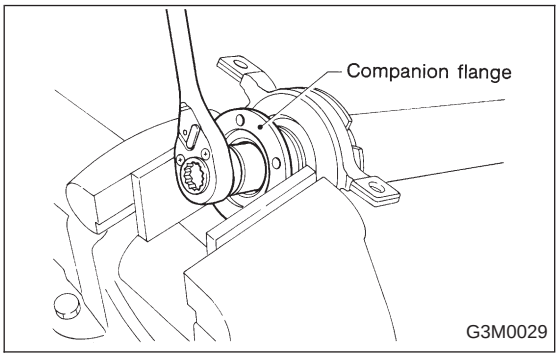

3) Place companion flange in a vise and remove stake nut.

CAUTION:
Be sure not to hold propeller shaft pipe portion in the vise.

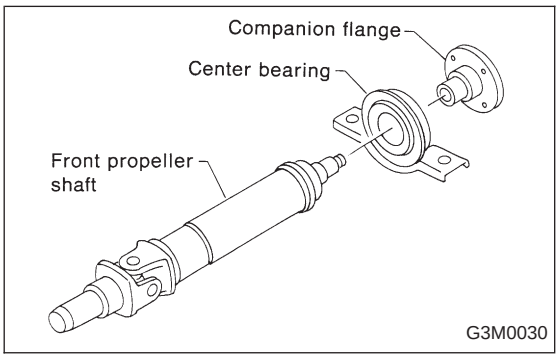

4) Drive out companion flange with a puller or press.

NOTE:
Before disassembling, put matching mark on affected parts.

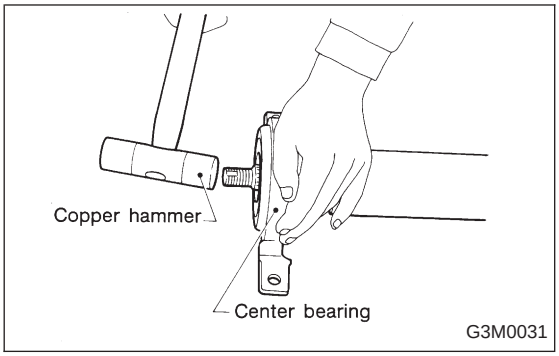

5) Lightly tap the head of front propeller shaft with a copper hammer until center bearing is removed.

CAUTION:
Be careful not to damage the thread portion.

D: INSPECTION

NOTE:
Do not disassemble propeller shaft. Check the following and replace if necessary.

1) Tube surfaces for dents or cracks
2) Splines for deformation or abnormal wear
3) Joints for non-smooth operation or abnormal noise
4) Center bearing for free play, noise or non-smooth operation
5) Oil seals for abnormal wear or damage
6) Center bearing for breakage

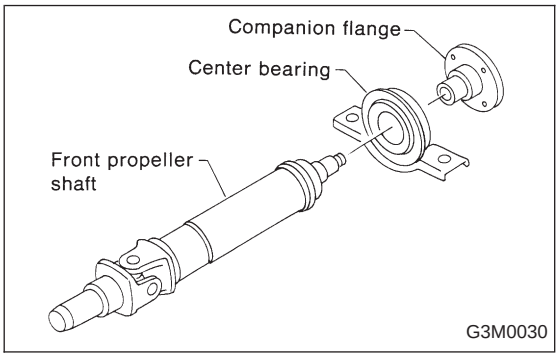

E: ASSEMBLY

1) Install center bearing onto front propeller shaft.
2) Align marks and install companion flange.

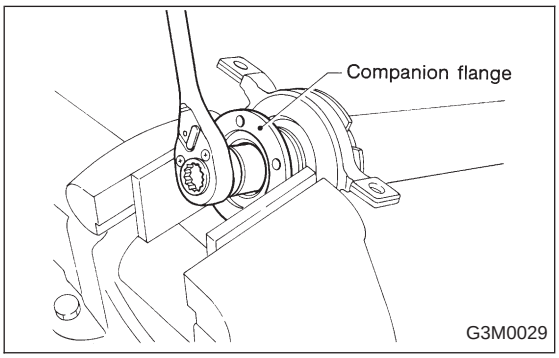

3) Tighten stake nut until center bearing is set in position.

CAUTION:
Be sure to install new stake nut.

Tightening torque:
270±25 N·m (27.5±2.5 kg-m, 199±18 ft-lb)

NOTE:
Stake the nut after tightening.

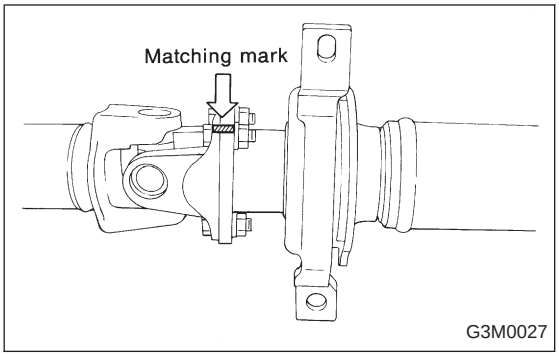

4) Align matching marks and connect front and rear propeller shafts.

Tightening torque:
27.9±4.4 N·m (2.85±0.45 kg-m, 20.6±3.3 ft-lb)

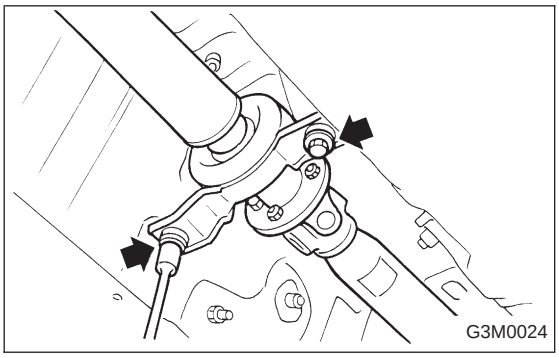

F: INSTALLATION

1) Insert sleeve yoke into transmission and attach center bearing to vehicle body.

Tightening torque:
52±5 N·m (5.3±0.5 kg-m, 38.3±3.6 ft-lb)

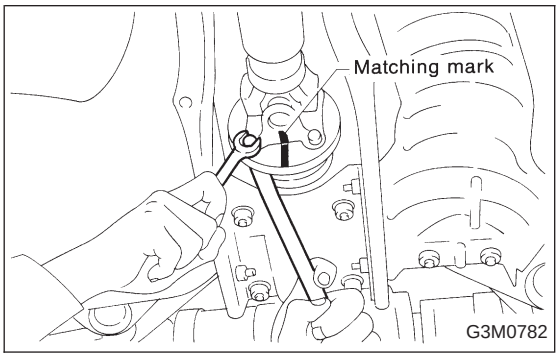

2) Align matching marks and connect flange yoke and rear differential.

Tightening torque:
31±8 N·m (3.2±0.8 kg-m, 23.1±5.8 ft-lb)

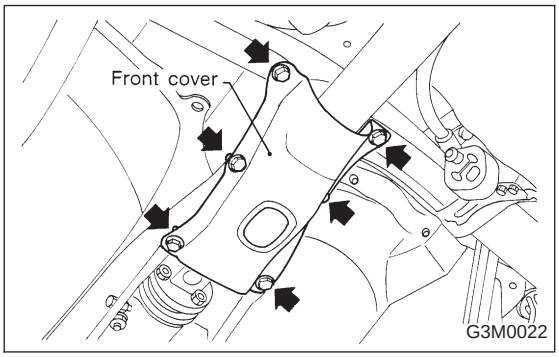

3) Install differential mount front cover.

Tightening torque:
88±10 N·m (9.0±1.0 kg-m, 65±7 ft-lb)

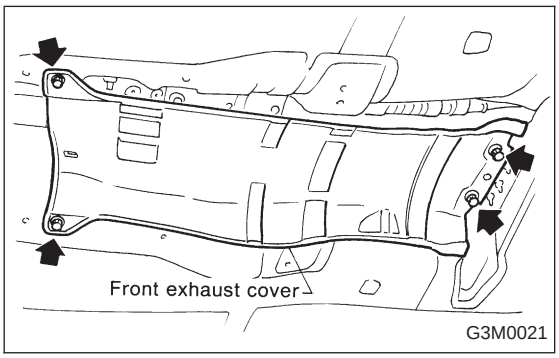

4) Install front exhaust cover.
5) Install rear exhaust pipe and muffler.