3. Rear Differential Front Member

A: REMOVAL

1) Disconnect ground cable from battery.
2) Move selector lever or gear shift lever to “N”.
3) Release the parking brake.
4) Loosen wheel nuts.
5) Jack-up vehicle and support it with sturdy racks.
6) Remove wheels.
7) Remove rear exhaust pipe and muffler.
<Ref. to 2-9 [W2A0], [W3A0].>
8) Remove rear differential front member.

NOTE:
When removing rear differential front member, work the removal procedure as rear differential.
<Ref. to 3-4 [W2B0].>

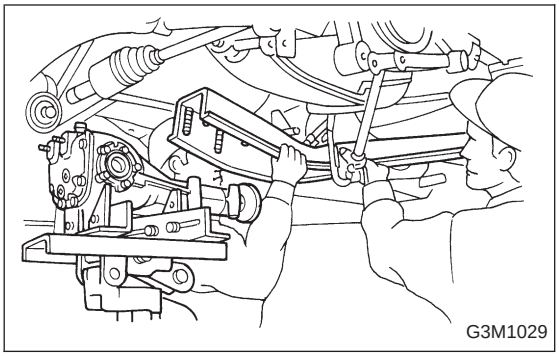

B: INSTALLATION

To install, reverse the removal sequence.

1) Position front member on body by passing it under parking brake cable and securing to rear differential.

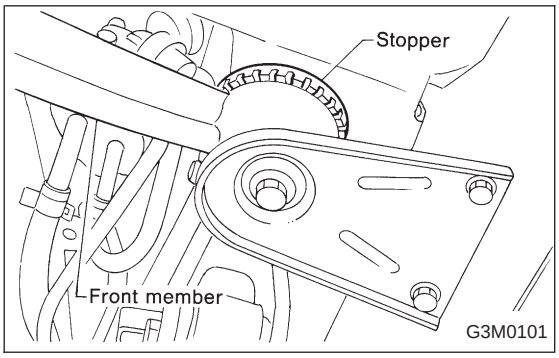

NOTE:
When installing rear differential front member, do not confuse the installation sequence of the stopper.

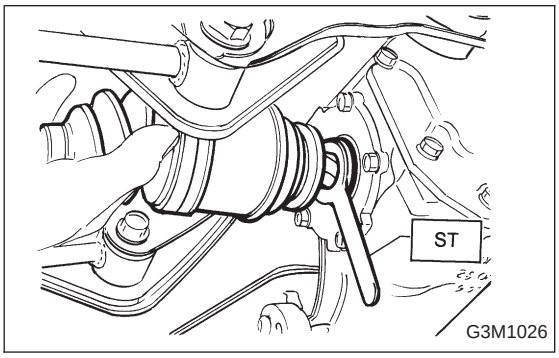

2) Insert DOJ of rear drive shaft into rear differential.

ST 28099PA090 SIDE OIL SEAL PROTECTOR

CAUTION:
Before inserting, replace the differential side oil seal and the circlip at the end of the spline shaft with a new one.

3) Installing procedure hereafter is in the reverse order of removal.