2. Rear Differential

A: ON-CAR SERVICE

1. FRONT OIL SEAL

1) Disconnect ground cable from battery.
2) Move selector lever or gear shift lever to “N”.
3) Release the parking brake.

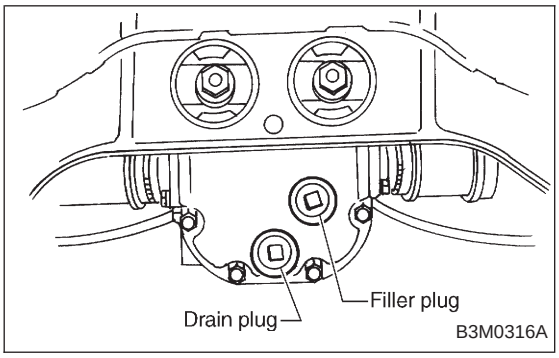

4) Remove oil drain plug, and drain gear oil.

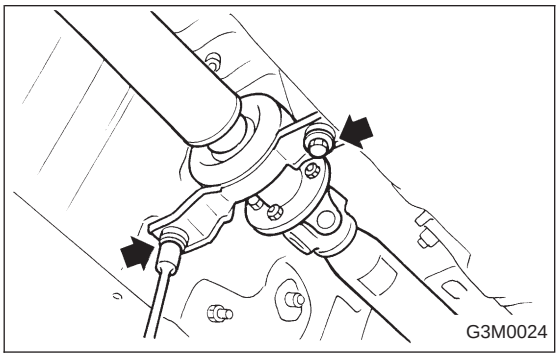

5) Jack-up rear wheels and support the vehicle body with sturdy racks.
6) Remove propeller shaft from body. <Ref. to 3-4 [W1B0].>

CAUTION:
Wrap metal parts with a cloth or rubber material to prevent damage from adjacent metal parts.

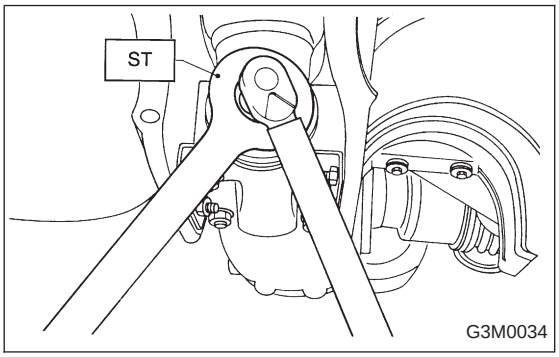

7) Remove self-locking nut while holding companion flange with ST.
ST 498427200 FLANGE WRENCH

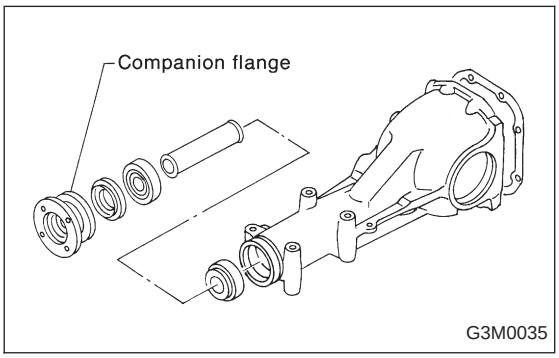

8) Extract companion flange with a puller.

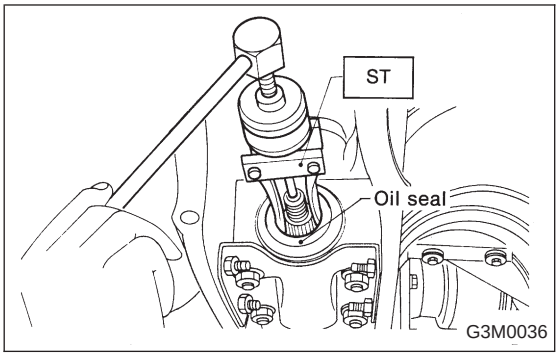

9) Remove oil seal using ST.
ST 499705401 PULLER ASSY

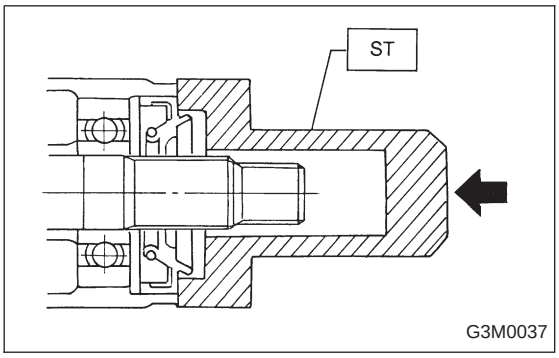

10) Fit a new oil seal using ST.
ST 498447120 OIL SEAL INSTALLER

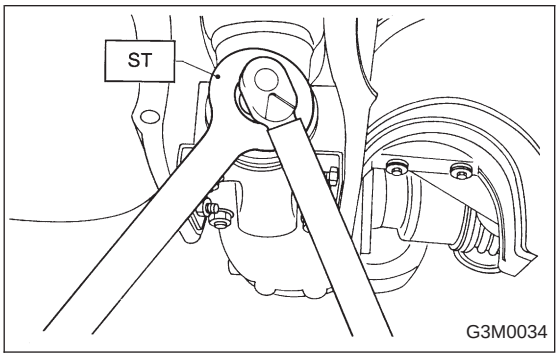

11) Install companion flange.
12) Tighten self-locking nut within the specified torque range so that the turning resistance of companion flange becomes the same as that before replacing oil seal.

ST 498427200 FLANGE WRENCH

CAUTION:
Use a new self-locking nut.

Tightening torque:
181.4±14.7 N·m (18.50±1.50 kg-m, 133.8±10.8 ft-lb)

13) Reassembling procedure hereafter is the reverse of the disassembling.

2. SIDE OIL SEAL

1) Disconnect ground cable from battery.
2) Move selector lever or gear shift lever to “N”.
3) Release the parking brake.
4) Loosen both wheel nuts.
5) Jack-up the vehicle and support it with rigid racks.
6) Remove wheels.
7) Remove rear exhaust pipe and muffler.
<Ref. to 2-9 [W2A0], [W3A0].>

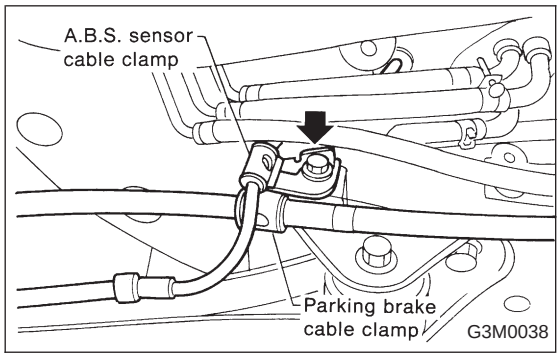

8) Remove the DOJ of rear drive shaft from rear differential.

(1) Remove the A.B.S. sensor cable clamp and parking brake cable clamp from bracket.

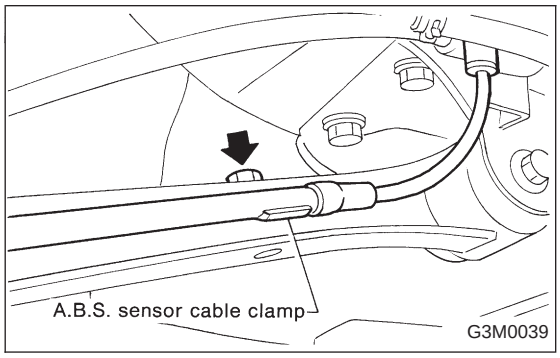

(2) Remove the A.B.S. sensor cable clamp from the trailing link.

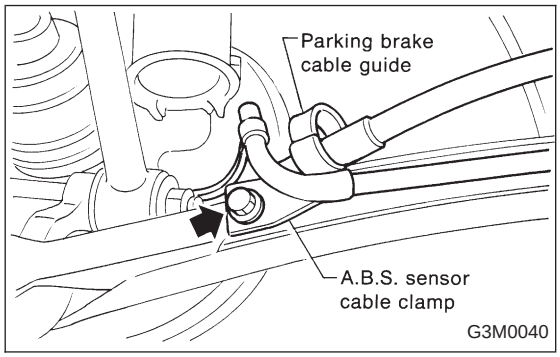

(3) Remove the A.B.S. sensor cable clamp and parking brake cable guide from the trailing link.

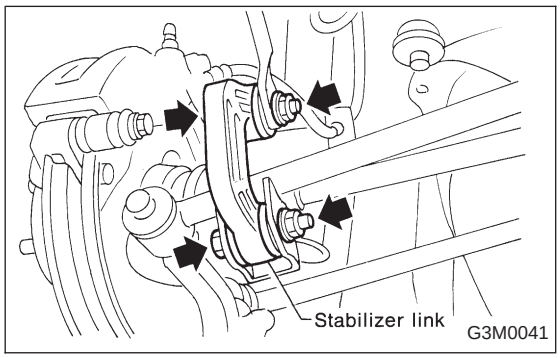

(4) Remove the rear stabilizer link.

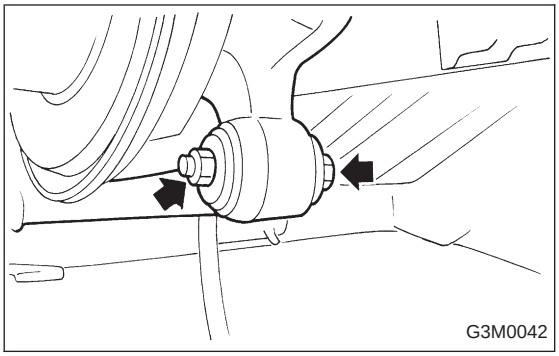

(5) Remove the bolts which secure the trailing link to the rear housing.

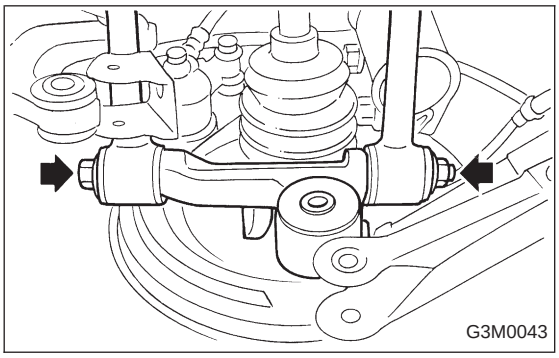

(6) Remove the bolts which secure the front and rear lateral link to the rear housing.

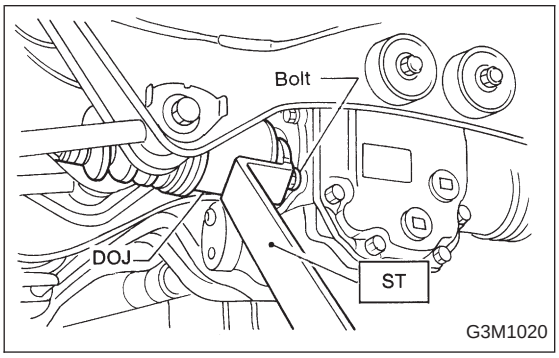

(7) Remove crossmember reinforcement lower (AWD Sedan only).
(8) Remove the DOJ from the rear differential by using ST.

ST 208099PA100 DRIVE SHAFT REMOVER

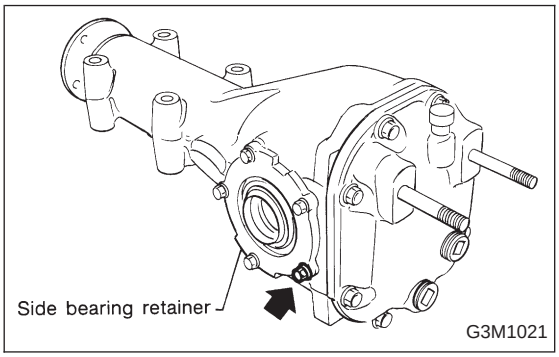

CAUTION:
When removing the DOJ from the rear differential, fit tire lever to the bolt as shown in figure so as not to damage the side bearing retainer.

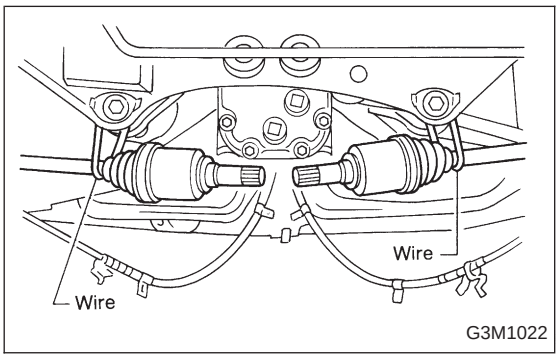

9) Secure rear drive shaft to rear crossmember using wire.

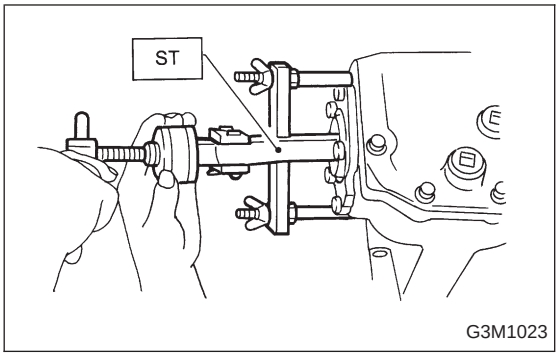

10) Remove side oil seal with ST.

ST 398527700 PULLER ASSY

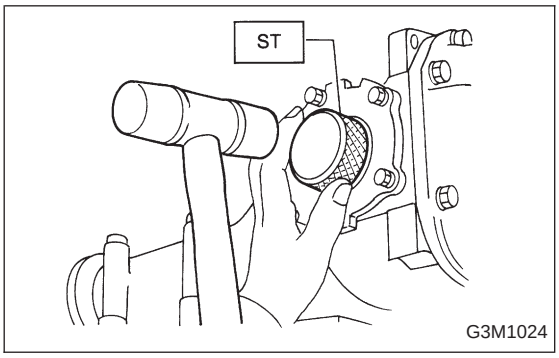

11) Drive in a new side oil seal with ST.

CAUTION:
Apply chassis grease between the oil seal lips.

ST 398437700 DRIFT

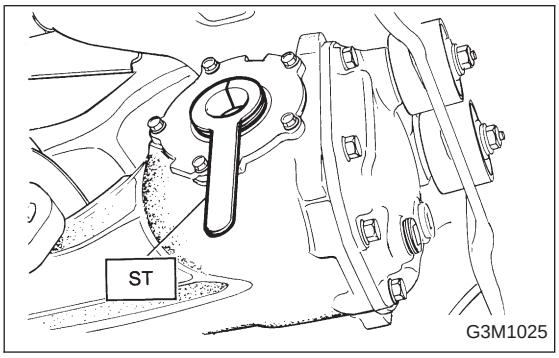

12) Insert the DOJ into rear differential.

(1) Install ST to rear differential.

ST 28099PA090 SIDE OIL SEAL PROTECTOR

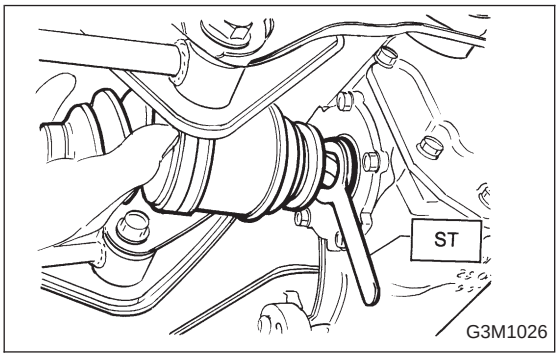

(2) Insert the spline shaft until the spline portion is inside the side oil seal.

(3) Remove ST.

ST 28099PA090 SIDE OIL SEAL PROTECTOR

13) Hereafter, re-assemble in reverse order of disassembly.

B: REMOVAL

1) Disconnect ground cable from battery.
2) Move selector lever or gear shift lever to “N”.
3) Release the parking brake.
4) Loosen wheel nuts.
5) Jack-up vehicle and support it with sturdy racks.
6) Remove wheels.
7) Remove rear exhaust pipe and muffler.
<Ref. to 2-9 [W2A0], [W3A0].>

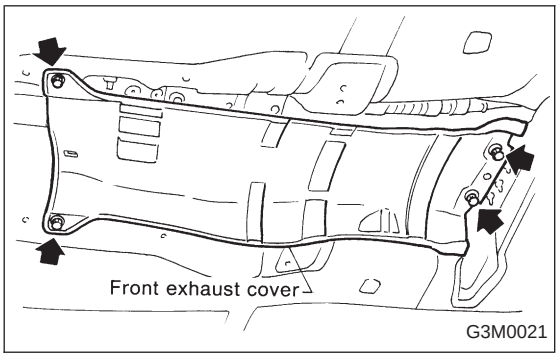

8) Remove front exhaust cover.

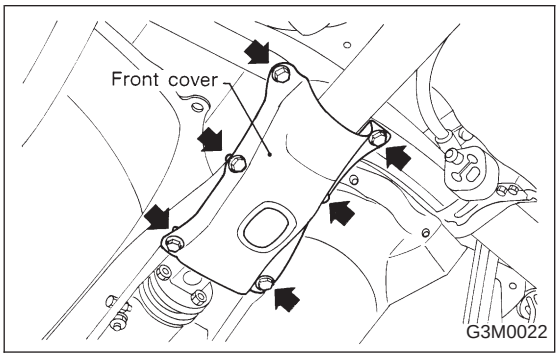

9) Remove front cover of rear differential mount.

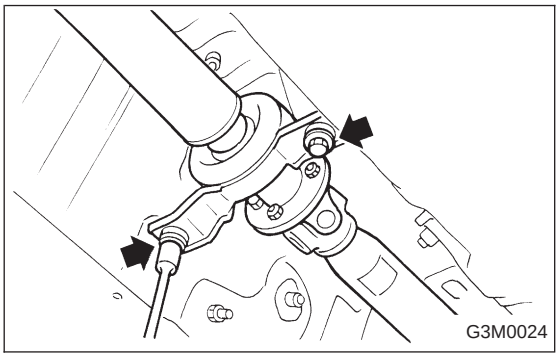

10) Remove propeller shaft.

CAUTION:
When removing propeller shaft, pay attention not to damage the sliding surfaces of rear drive shaft (extension) spline, oil seal and sleeve yoke.

NOTE:
Prepare an oil can and cap since the transmission oil flows out from the extension at removing propeller shaft.

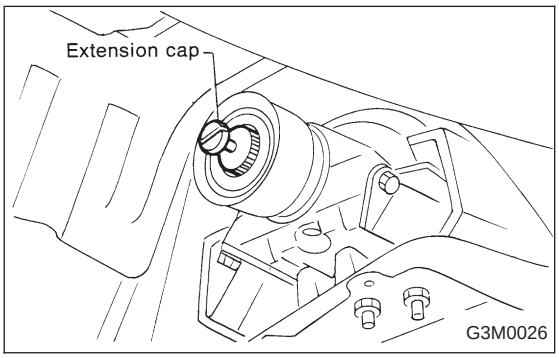

NOTE:
Insert the cap into the extension to prevent transmission oil from flowing out immediately after removing the propeller shaft.

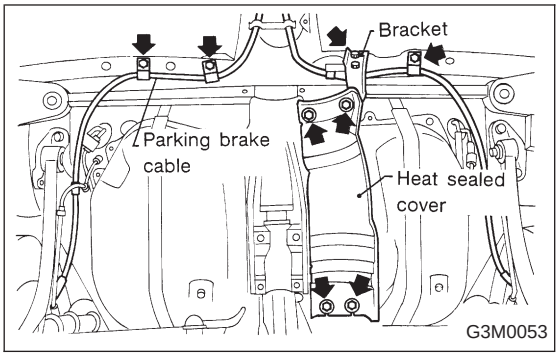

11) Remove heat sealed cover.
12) Remove clamps and bracket of parking brake cable.
13) Remove crossmember reinforcement lower (AWD Sedan only).

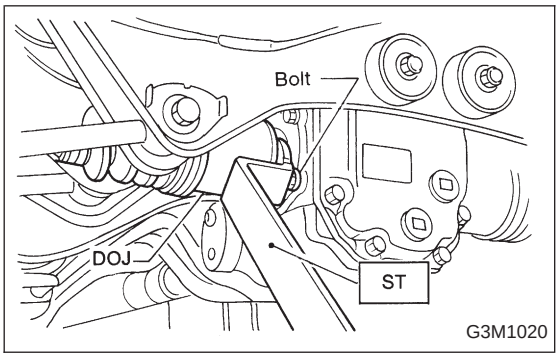

14) Remove DOJ of rear drive shaft from rear differential using ST. <Ref. to 3-4 [W2A2].>

ST 28099PA100 DRIVE SHAFT REMOVER

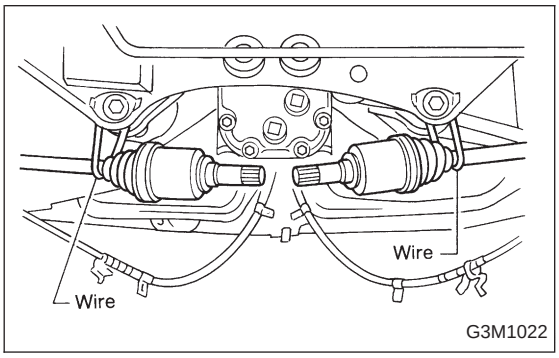

15) Secure rear drive shaft to rear crossmember using wire.

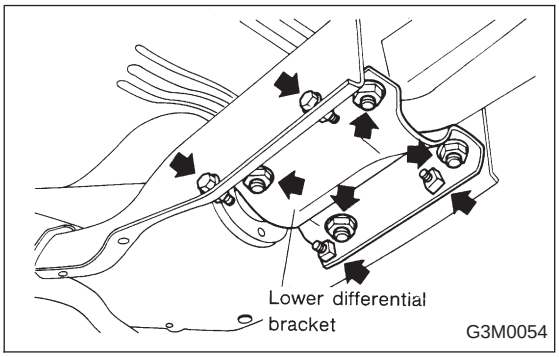

16) Remove lower differential bracket.

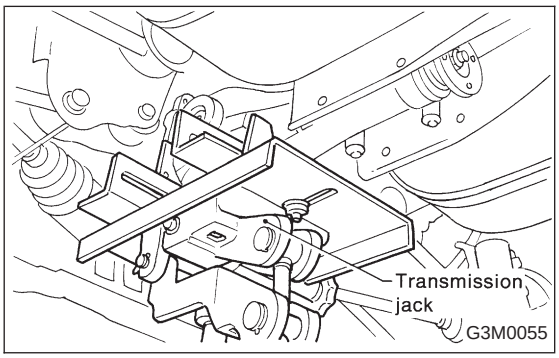

17) Support rear differential with transmission jack.

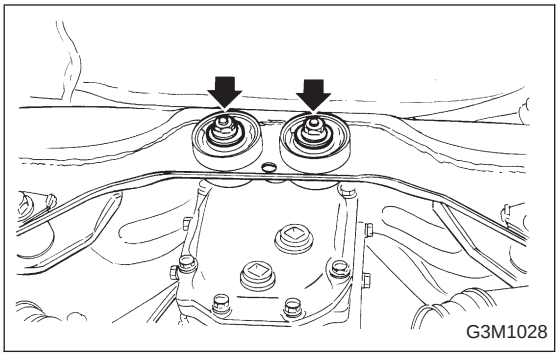

18) Remove self-locking nuts connecting rear differential to rear crossmember.

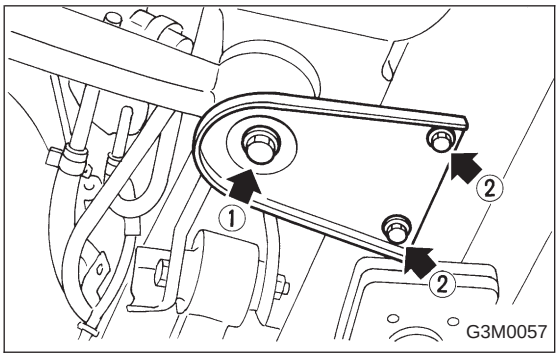

19) Remove bolts which secure rear differential front member to body.
Loosen bolt ① first, then remove bolts ②.

NOTE:
Support front member with the use of a helper to prevent it from dropping.

20) Remove bolt ①.

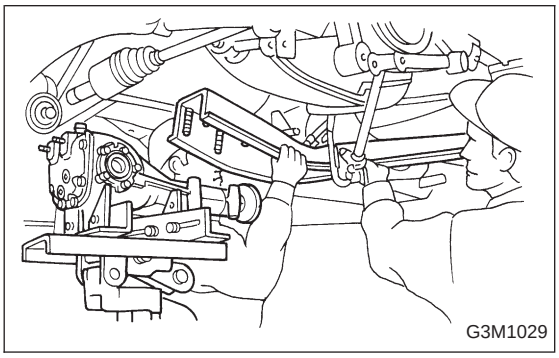

21) While slowly lowering transmission jack, move rear differential forward and remove front member and rear differential from body.

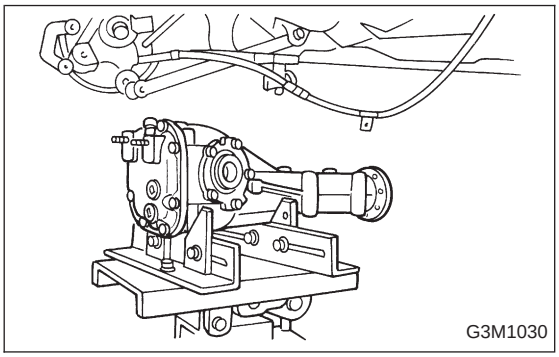

22) Remove rear differential from front member.

C: DISASSEMBLY

To detect real cause of trouble, inspect the following items before disassembling. <Ref. to 3-4 [W2E0].>

- Tooth contact of crown gear and pinion, and backlash
- Runout of crown gear at its back surface
- Turning resistance of drive pinion

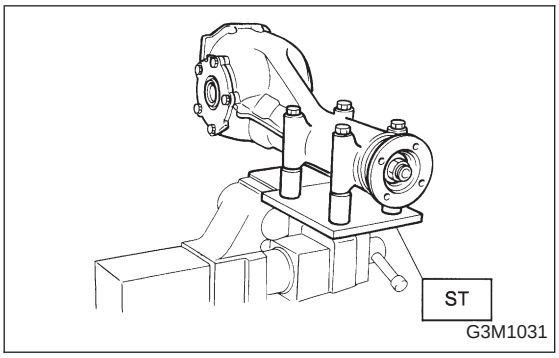

1) Set ST on vise and install the differential assembly to ST.
ST 398217700 ATTACHMENT
2) Drain gear oil by removing plug.

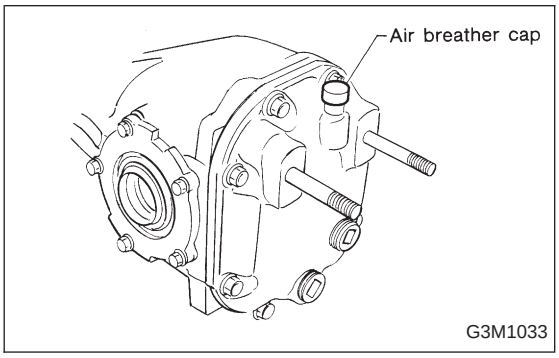

3) Remove the air breather cap.
NOTE:
Do not attempt to replace the air breather cap unless necessary.

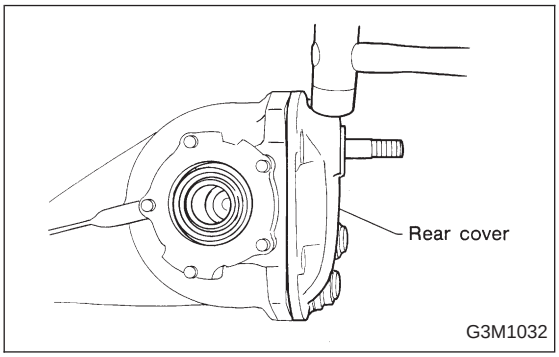

4) Remove rear cover by loosening retaining bolts.

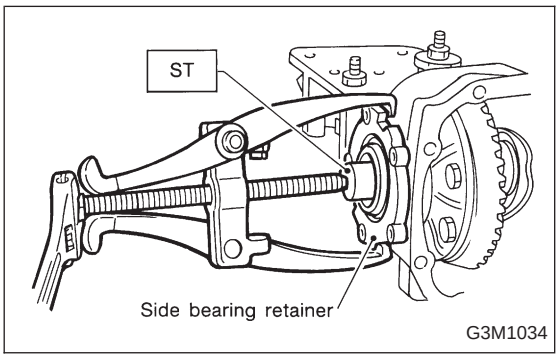

5) Make right and left side bearing retainers in order to identify them at reassembly. Remove side bearing retainer attaching bolts, set ST to differential case, and extract right and left side bearing retainers with a puller.
ST 398457700 ATTACHMENT

CAUTION:
Each shim, which is installed to adjust the side bearing preload, should be kept together with its mating retainer.

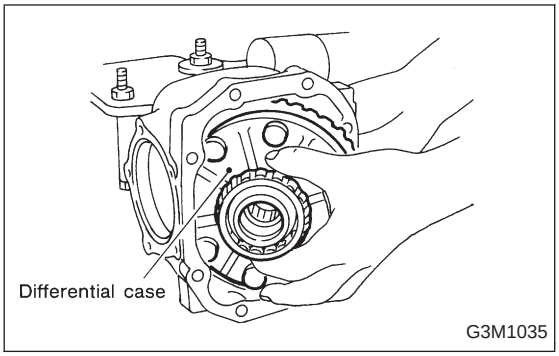

6) Pull out differential assembly from differential carrier.

CAUTION:
Be careful not to hit the teeth against the case.

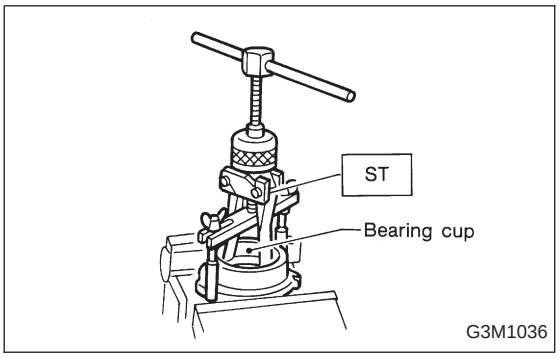

7) When replacing side bearing, pull bearing cup from side bearing retainer using ST.

ST 398527700 PULLER ASSY

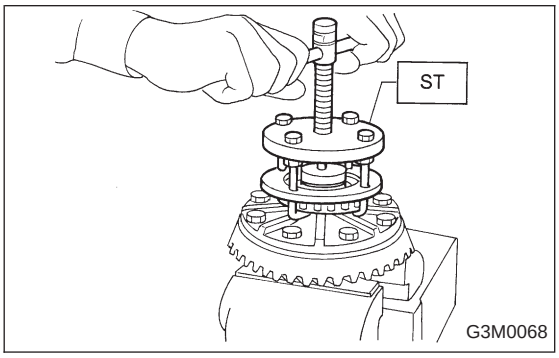

8) Extract bearing cone with ST.

CAUTION:
Do not attempt to disassemble the parts unless necessary.

NOTE:
- Set puller so that its claw catch the edge of the bearing cone.
- Never mix up the right and left hand bearing cups and cones.

ST 399527700 PULLER SET

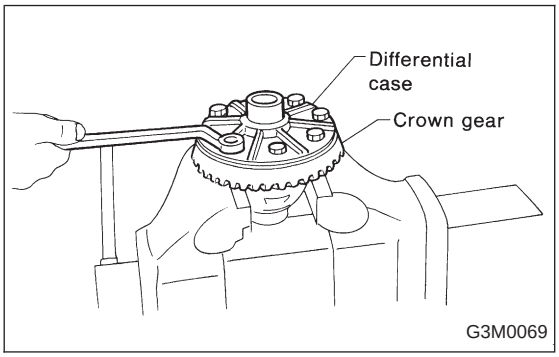

9) Remove crown gear by loosening crown gear bolts.

CAUTION:
Further disassembling is not allowed.

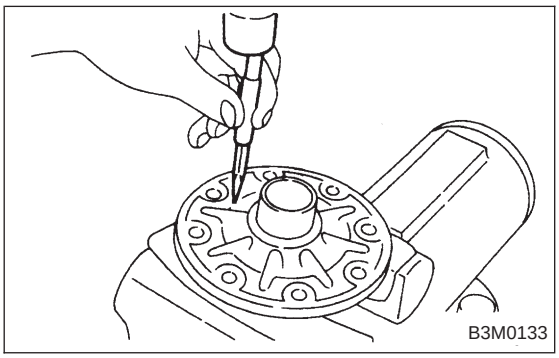

10) Drive out pinion shaft lock pin from crown gear side.

NOTE:
The lock pin is staked at the pin hole end on the differential carrier; do not drive it out forcibly before unstaking it.

ST 899904100 STRAIGHT PIN REMOVER

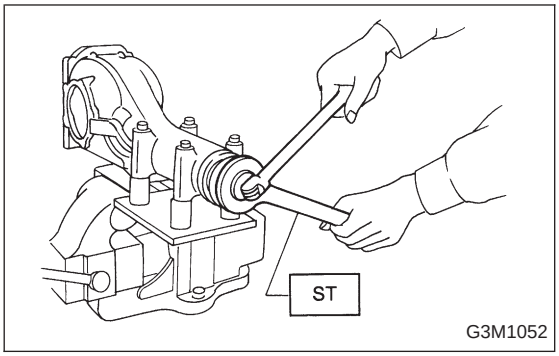

11) Hold companion flange with ST and remove drive pinion nut.
ST 498427200 FLANGE WRENCH

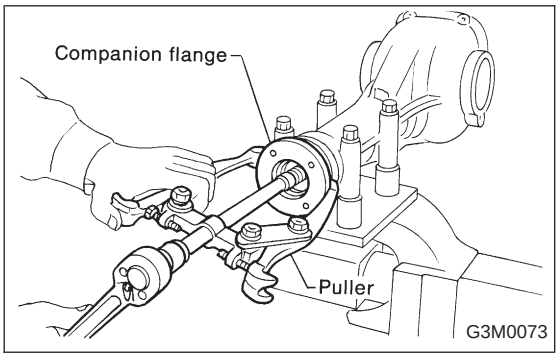

12) Extract the companion flange with a puller.

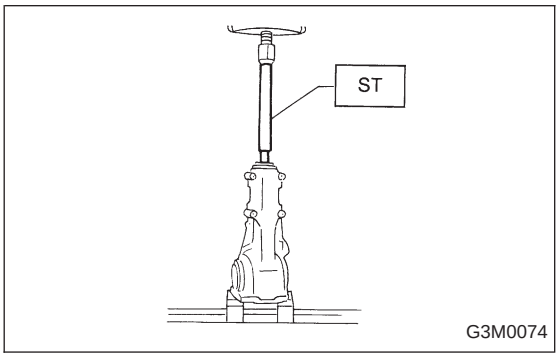

13) Press the end of drive pinion shaft and extract it together with rear bearing cone, preload adjusting spacer and washer.

NOTE:
Hold the drive pinion so as not to drop it.
ST 398467700 DRIFT

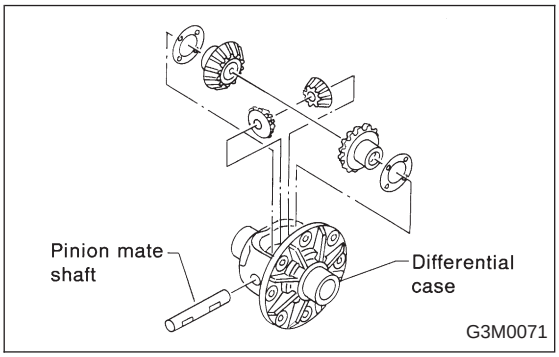

14) Draw out pinion mate shaft and remove pinion mate gears, side gears and thrust washers.

NOTE:
The gears as well as thrust washers should be marked or kept separated left and right, and front and rear.

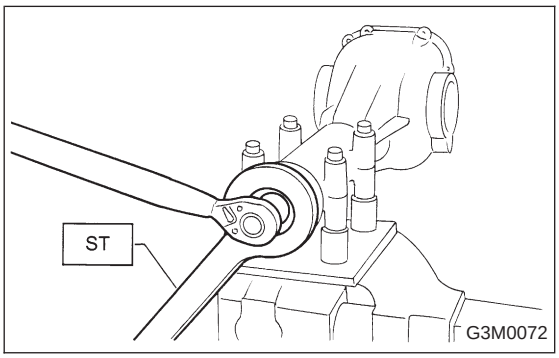

15) Hold companion flange with ST and remove drive pinion nut.
ST 498427200 FLANGE WRENCH

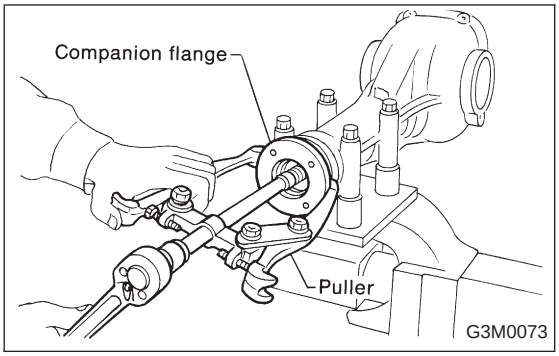

16) Extract the companion flange with a puller.

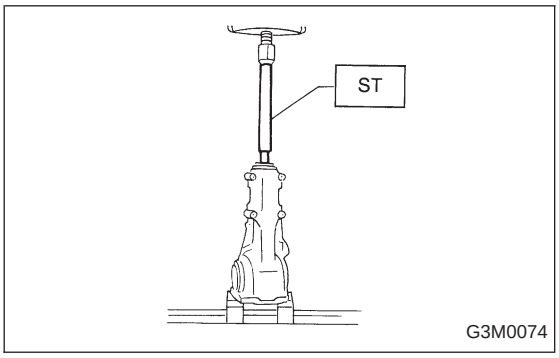

17) Press the end of drive pinion shaft and extract it together with rear bearing cone, preload adjusting spacer and washer.

NOTE:
Hold the drive pinion so as not to drop it.
ST 398467700 DRIFT

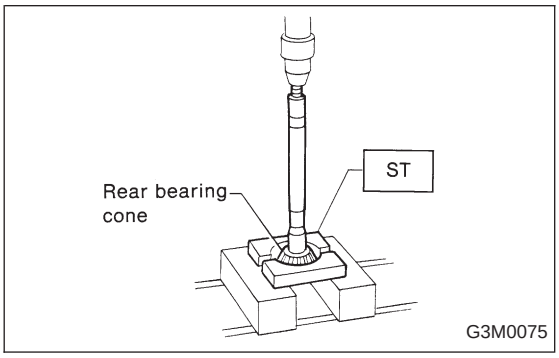

18) Remove rear bearing cone from drive pinion by supporting cone with ST.

NOTE:
Place the replacer so that its center-recessed side faces the pinion gear.
ST 498515500 REPLACER

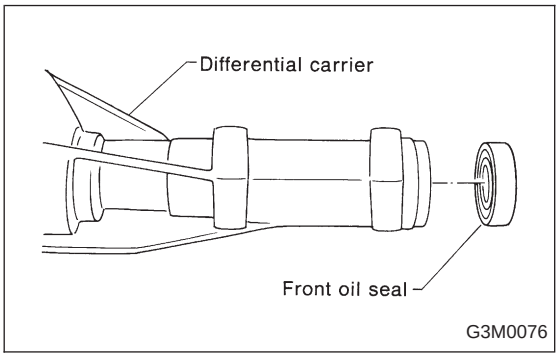

19) Remove front oil seal from differential carrier using ST.

ST 398527700 PULLER ASSY

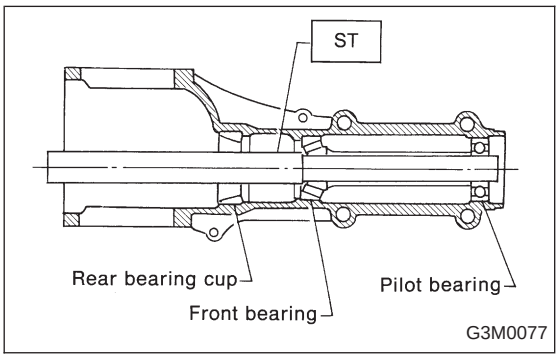

20) Remove pilot bearing together with front bearing cone using ST.
ST 398467700 DRIFT

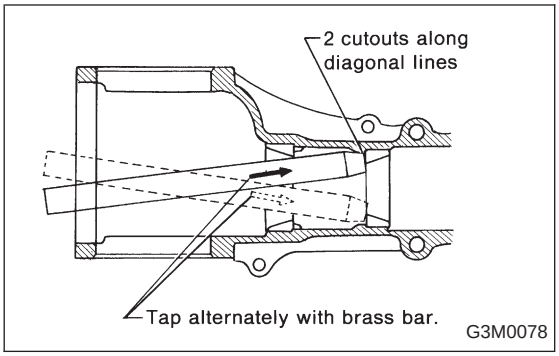

21) When replacing bearings, tap front bearing cup and rear bearing cup in this order out of case by using a brass bar.

D: INSPECTION

Wash all the disassembled parts clean, and examine them for wear, damage, or other defects. Repair or replace defective parts as necessary.

1) Crown gear and drive pinion

(1) If abnormal tooth contact is evident, find out the cause and adjust to give correct tooth contact at assembly. Replace the gear if excessively worn or incapable of adjustment.

(2) If crack, score, or seizure is evident, replace as a set. Slight damage of tooth can be corrected by oil stone or the like.

2) Side gear and pinion mate gear

(1) Replace if crack, score, or other defects are evident on tooth surface.

(2) Replace if thrust washer contacting surface is worn or seized. Slight damage of the surface can be corrected by oil stone or the like.

3) Bearing

Replace if seizure, peeling, wear, rust, dragging during rotation, abnormal noise or other defect is evident.

4) Thrust washers of side gear and pinion mate gear

Replace if seizure, flaw, abnormal wear or other defect is evident.

5) Oil seal

Replace if deformed or damaged, and at every disassembling.

6) Differential carrier

Replace if the bearing bores are worn or damaged.

7) Differential case

Replace if its sliding surfaces are worn or cracked.

8) Companion flange

Replace if the oil seal lip contacting surfaces have flaws.

E: ASSEMBLY

1) Precautions for assembling

(1) Assemble in the reverse order of disassembling.
(2) Check and adjust each part during assembly.
(3) Keep the shims and washers in order, so that they are not misinstalled.
(4) Thoroughly clean the surfaces on which the shims, washers and bearings are to be installed.
(5) Apply gear oil when installing the bearings and thrust washers.
(6) Be careful not to mix up the right and left hand cups of the bearings.

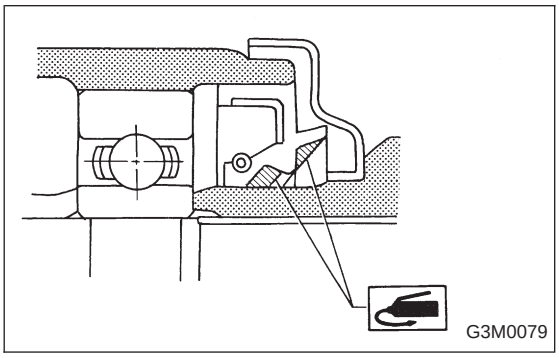

(7) Replace the oil seal with new one at every disassembly. Apply chassis grease between the lips when installing the oil seal.

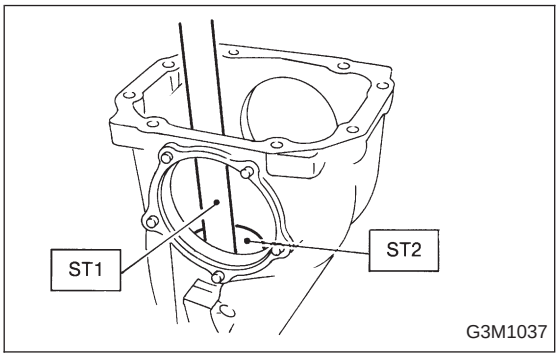

2) Adjusting preload for front and rear bearings

Adjust the bearing preload with spacer and washer between front and rear bearings. Pinion height adjusting washer are not affected by this adjustment. The adjustment must be carried out without oil seal inserted.

(1) Press rear bearing race into differential carrier with ST1 and ST2.

ST1 398477701 HANDLE
ST2 398427703 DRIFT 2

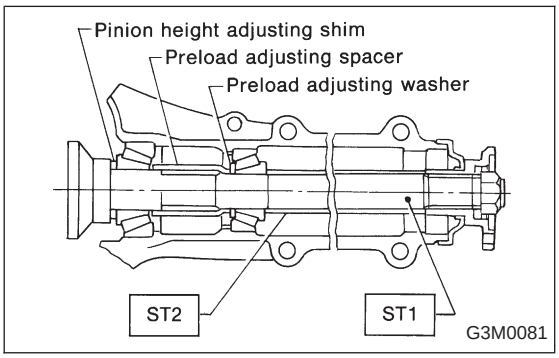

(2) Insert ST1 into case with pinion height adjusting washer and rear bearing cone fitted onto it.

CAUTION:
- **Re-use the used washer if not deformed.**
- **Use a new rear bearing cone.**

(3) Then install preload adjusting spacer and washer, front bearing cone, ST2, companion flange, and washer and drive pinion nut.

ST1 398507702 DUMMY SHAFT
ST2 398507703 DUMMY COLLAR

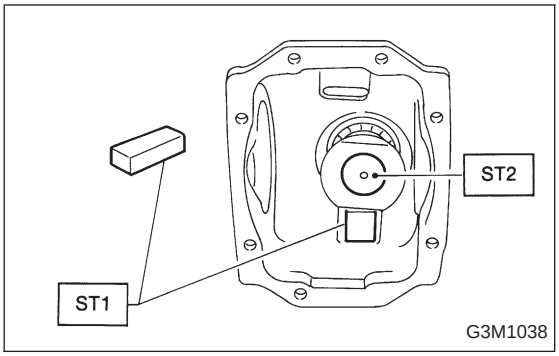

(4) Turn ST1 with hand to make it seated, and tighten drive pinion nut while measuring the preload with spring balance. Select preload adjusting washer and spacer so that the specified preload is obtained when nut is tightened to the specified torque with ST2.

CAUTION:
Use a new lock nut.

NOTE:
- Be careful not to give excessive preload.

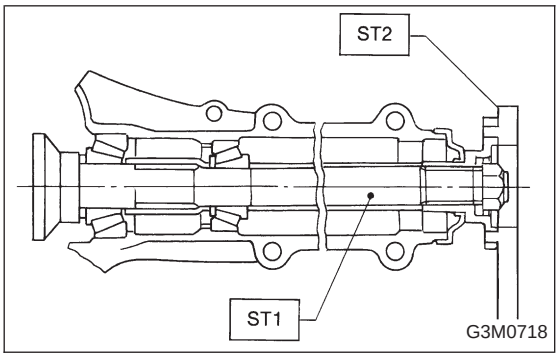

- When tightening the drive pinion nut, lock ST1 with ST2 as shown in the figure.

ST1 398507704 BLOCK
ST2 398507702 DUMMY SHAFT
ST3 498427200 FLANGE WRENCH

Tightening Torque:
181±15 N·m (18.5±1.5 kg-m, 134±11 ft-lb)

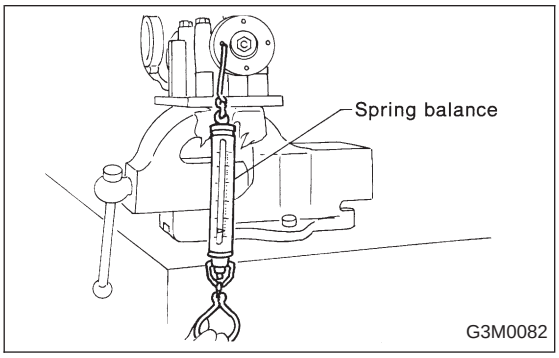

Front and rear bearing preload
For new bearing: 17.7 — 25.5 N (1.8 — 2.6 kg, 4.0 — 5.7 lb) at companion flange bolt hole

	Part No.	Length mm (in)
● Preload adjusting washer length	383705200	2.59 (0.1020)
	383715200	2.57 (0.1012)
	383725200	2.55 (0.1004)
	383735200	2.53 (0.0996)
	383745200	2.51 (0.0988)
	383755200	2.49 (0.0980)
	383765200	2.47 (0.0972)
	383775200	2.45 (0.0965)
	383785200	2.43 (0.0957)
	383795200	2.41 (0.0949)
	383805200	2.39 (0.0941)
	383815200	2.37 (0.0933)
	383825200	2.35 (0.0925)
	383835200	2.33 (0.0917)
	383845200	2.31 (0.0909)
● Preload adjusting spacer length	383695201	56.2 (2.213)
	383695202	56.4 (2.220)
	383695203	56.6 (2.228)
	383695204	56.8 (2.236)
	383695205	57.0 (2.244)
	383695206	57.2 (2.252)

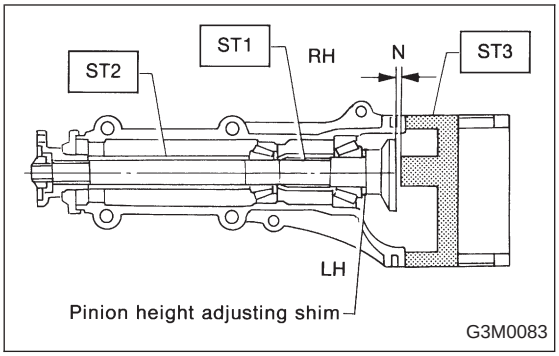

3) Adjusting drive pinion height
Adjust drive pinion height with shim installed between rear bearing cone and the back of pinion gear.

(1) Install ST1, ST2 and ST3, as shown in the figure, and apply the specified preload on the bearings. <Ref. to 2).> Adjusting preload for front and rear bearings

NOTE:
At this time, install a pinion height adjusting shim which is temporarily selected or the same as that used before.

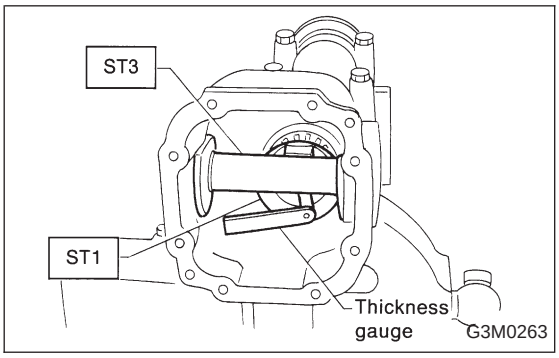

(2) Measure the clearance N between the end of ST3 and the end surface of ST1 by using a thickness gauge.

NOTE:
Make sure there is no clearance between the case and ST3.

ST1 398507702 DUMMY SHAFT
ST2 398507703 DUMMY COLLAR
ST3 398507701 DIFFERENTIAL CARRIER GAUGE

(3) Obtain the thickness of pinion height adjusting shim to be inserted from the following formula, and replace the temporarily installed shim with this one.

T = To + N − (H x 0.01) − 0.20 (mm)

Where:
T = Thickness of pinion height adjusting shim (mm)
To = Thickness of shim temporarily inserted (mm)
N = Reading of thickness gauge (mm)
H = Figure marked on drive pinion head

(Example of calculation)
To = 2.20 + 1.20 = 3.40 mm
N = 0.23 mm H = + 1,
T = 3.40 + 0.23 − 0.01 − 0.20 = 3.42
Result: Thickness = 3.42 mm

Therefore use the shim 383605200.

	Part No.	Thickness mm (in)
● Pinion height adjusting shim thickness	383495200	3.09 (0.1217)
	383505200	3.12 (0.1228)
	383515200	3.15 (0.1240)
	383525200	3.18 (0.1252)
	383535200	3.21 (0.1264)
	383545200	3.24 (0.1276)
	383555200	3.27 (0.1287)
	383565200	3.30 (0.1299)
	383575200	3.33 (0.1311)
	383585200	3.36 (0.1323)
	383595200	3.39 (0.1335)
	383605200	3.42 (0.1346)
	383615200	3.45 (0.1358)
	383625200	3.48 (0.1370)
	383635200	3.51 (0.1382)
	383645200	3.54 (0.1394)
	383655200	3.57 (0.1406)
	383665200	3.60 (0.1417)
	383675200	3.63 (0.1429)
	383685200	3.66 (0.1441)

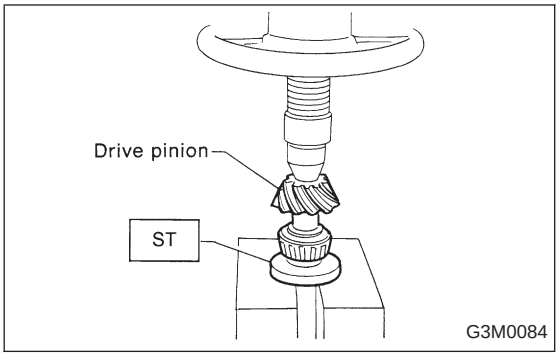

4) Install the selected pinion height adjusting shim on drive pinion, and press the rear bearing cone into position with ST.
ST 398177700 INSTALLER

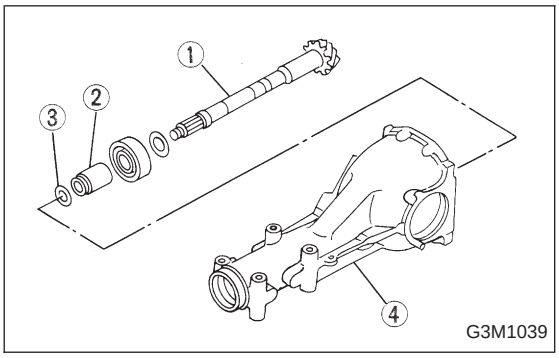

5) Insert drive pinion ① into differential carrier ④, install the previously selected bearing preload adjusting spacer ② and washer ③.

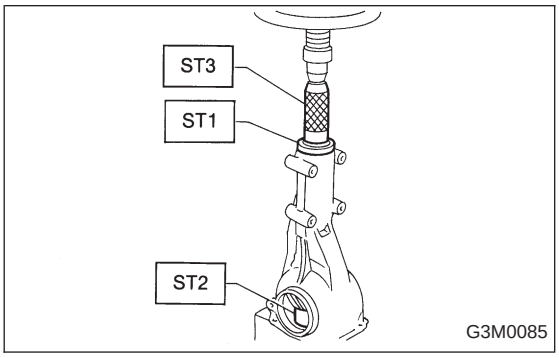

6) Press-fit front bearing cone into case with ST1, ST2 and ST3.
ST1 398507703 DUMMY COLLAR
ST2 399780104 WEIGHT
ST3 899580100 INSTALLER

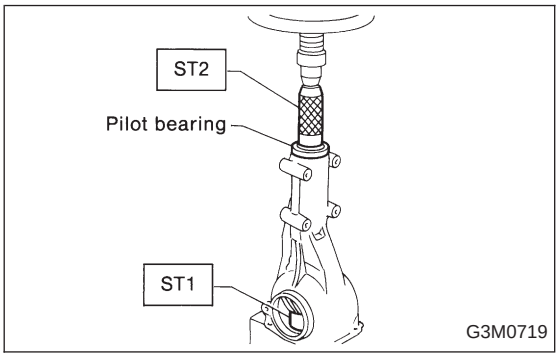

7) Insert spacer, then press-fit pilot bearing with ST1 and ST2.
ST1 399780104 WEIGHT
ST2 899580100 INSTALLER

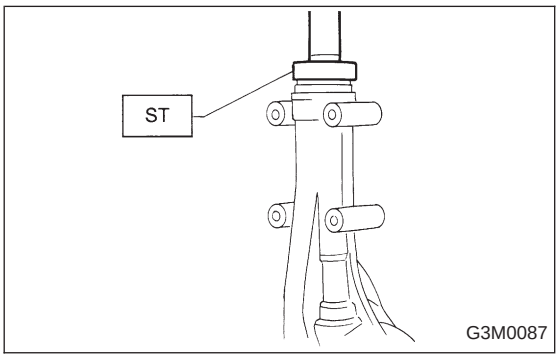

8) Fit a new oil seal with ST.

NOTE:
- Press-fit until end of oil seal is 1 mm (0.04 in) inward from end of carrier.
- Apply grease between the oil seal lips. <Ref. to 3-4 [W2E0] 1).>

ST 498447120 OIL SEAL INSTALLER

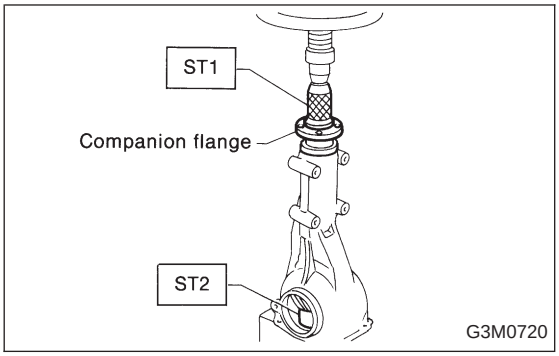

9) Press-fit companion flange with ST1 and ST2.

CAUTION:
Be careful not to damage bearing.

ST1 899874100 INSTALLER
ST2 399780104 WEIGHT

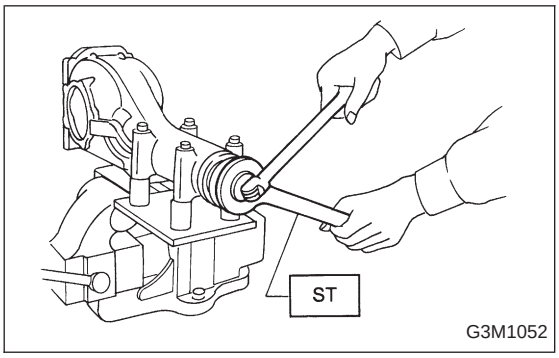

10) Install self-locking nut. Then tighten it with ST.
ST 498427200 FLANGE WRENCH

Tightening torque:
181±15 N·m (18.5±1.5 kg-m, 134±11 ft-lb)

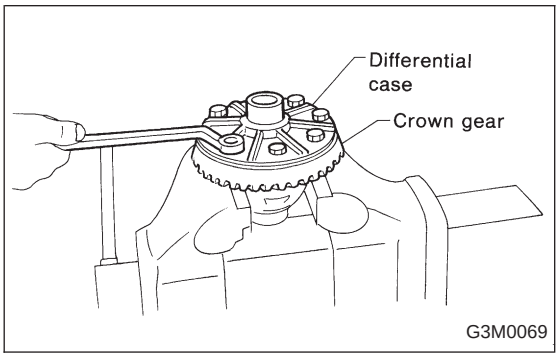

11) Install crown gear on differential case.

Tightening Torque:
103±10 N·m (10.5±1.0 kg-m, 76±7 ft-lb)

NOTE:
Tighten diagonally while tapping the bolt heads.

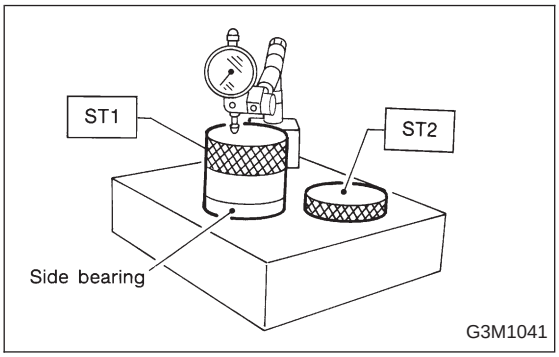

12) Before installing side bearing, measure the bearing width by using a dial gauge, ST1 and ST2.

Standard bearing width:
20.00 mm (0.7874 in)

NOTE:
Set the dial gauge needle to zero, using a standard bearing or block of specified height in advance.

ST1 398227700 WEIGHT
ST2 398237700 GAUGE

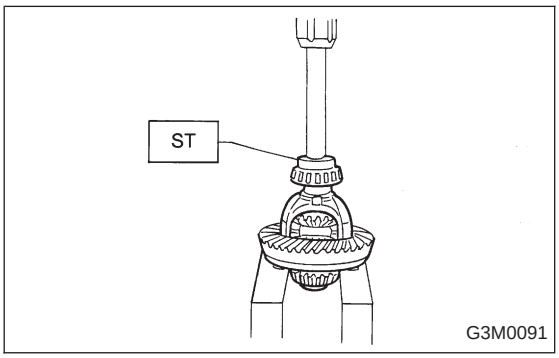

13) Press side bearing cone onto differential case with ST1.

ST1 398487700 DRIFT

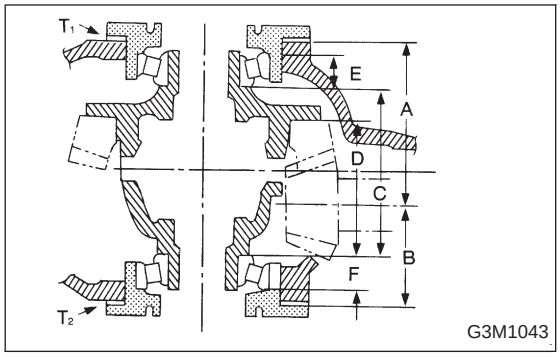

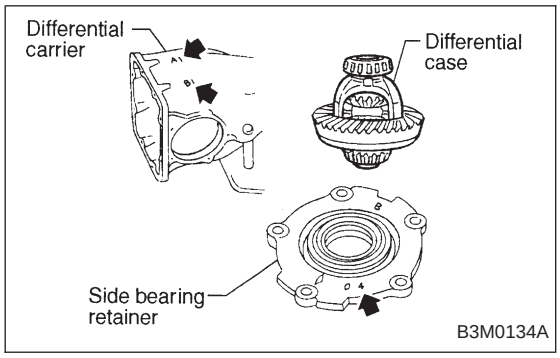

14) Adjusting side bearing retainer shims

(1) The drive gear backlash and side bearing preload can be determined by the side bearing retainer shim thickness.

(2) When replacing differential case, differential carrier, side bearing and side bearing retainer, obtain the right and left retainer shim thickness from the following formulas.

T_1 (Left) = $(A + C + G_1 - D) \times 0.01 + 0.76 - E$ (mm)

T_2 (Right) = $(B + D + G_2) \times 0.01 + 0.76 - F$ (mm)

T_1 & T_2 : Thickness of left and right side bearing retainer shim (mm)

A & B : Number marked on differential carrier

C & D : Number marked on differential case

E & F : Difference of width of left and right side bearing from standard width 20.0 mm, expressed in a unit of 0.01 mm. For example, if the bearing measured width is 19.89 mm, value of E or F is as follows. 20.00 −19.89 = 0.11 (E or F)

G_1 & G_2 : Number marked on side bearing retainer

If a number is not marked, regard it as zero.

NOTE:
Use several shims to obtain the calculated thickness.

	Part No.	Thickness mm (in)
● Side bearing retainer shim thickness	383475201	0.20 (0.0079)
	383475202	0.25 (0.0098)
	383475203	0.30 (0.0118)
	383475204	0.40 (0.0157)
	383475205	0.50 (0.0197)

Example of calculation

Ex. 1

A = 5, B = 5, C = 3, D = 3, G_1 = 4, G_2 = 1,
E = 0.10 mm, F = 0.15 mm

Left side

T_1 = (A + C + G_1 − D) x 0.01 + 0.76 − E
= (5 + 3 + 4 − 3) x 0.01 + 0.76 − 0.10
= 0.09 + 0.76 − 0.10 = 0.75 mm

The correct shims are as follows:

Thickness		Q'ty	
0.25	x	1	= 0.25
0.50	x	1	= 0.50

Total shim thickness = 0.75 mm

Right side

T_2 = (B + D + G_2) x 0.01 + 0.76 − F
= (5 + 3 + 1) x 0.01 + 0.76 − 0.15
= 0.09 + 0.76 − 0.15
= 0.70 mm

The correct shims are as follows:

Thickness		Q'ty	
0.20	x	1	= 0.20
0.50	x	1	= 0.50

Total shim thickness = 0.70 mm

Ex. 2

A = 2, B = 3, C = 0, D = 3, G_1 = 2, G_2 = 3,
E = 0.22 mm, F = 0.10 mm

Left side

T_1 = (A + C + G_1 − D) x 0.01 + 0.76 − E
= (2 + 0 + 2 − 3) x 0.01 + 0.76 − 0.22
= 0.01 + 0.76 − 0.22
= 0.55 mm

The correct shims are as follows:

Thickness		Q'ty	
0.25	x	1	= 0.25
0.30	x	1	= 0.30

Total shim thickness = 0.55 mm

Right side

T_2 = (B + D + G_2) x 0.01 + 0.76 − F
= (3 + 3 + 3) x 0.01 + 0.76 − 0.10
= 0.09 + 0.76 − 0.10
= 0.75 mm

The correct shims are as follows:

Thickness		Q'ty	
0.25	x	1	= 0.25
0.50	x	1	= 0.50

Total shim thickness = 0.75 mm

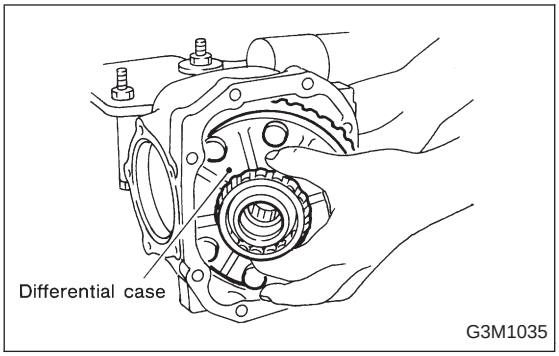

(3) Install the differential case assembly into differential carrier in the reverse order of disassembly.

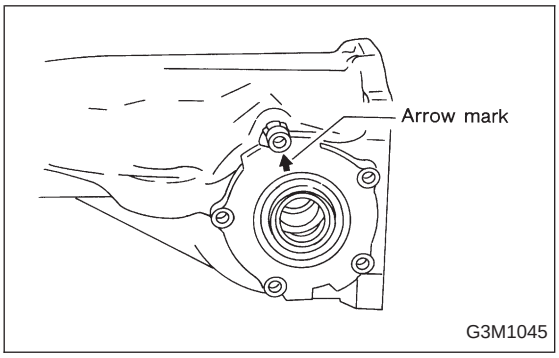

(4) Fit the selected shims and O-ring on side bearing retainer and install them on differential carrier with the arrow mark on the retainer directed as shown in figure.

CAUTION:
Be careful that side bearing cup is not damaged by bearing roller.

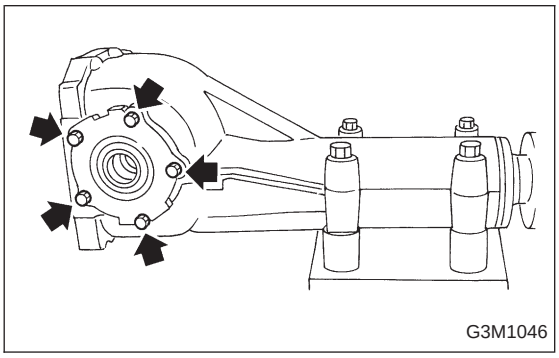

(5) Tighten side bearing retainer bolts.

Tightening Torque:
10.3±1.5 N·m (1.05±0.15 kg-m, 7.6±1.1 ft-lb)

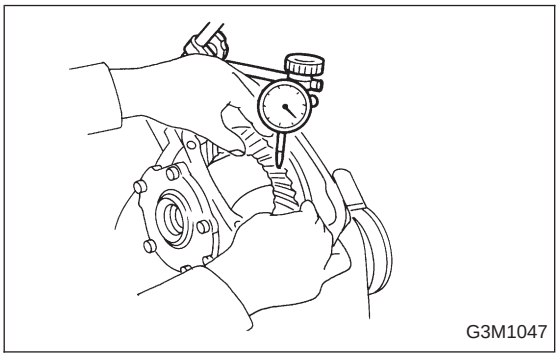

(6) Measure the crown gear-to-drive pinion backlash.

Set magnet base on differential carrier. Align contact point of dial gauge with tooth face of crown gear, and move crown gear while holding drive pinion still. Read value indicated on dial gauge.

Backlash:
0.10 — 0.20 mm (0.0039 — 0.0079 in)

(7) At the same time, measure the turning resistance of drive pinion. Compared with the resistance when differential case is not installed, if the increase of the resistance is not within the specified range, readjust side bearing retainer shims.

Turning resistance increase:
0.1 — 0.6 N·m (1 — 6 kg-cm, 0.9 — 5.2 in-lb)

NOTE:
If measured backlash is not within specified range, repeat steps (1) thru (7).

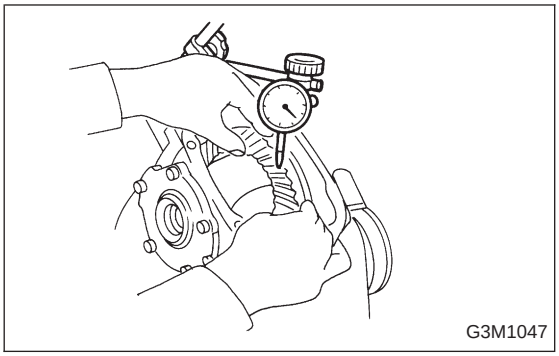

15) Re-check crown gear-to-pinion backlash.

Backlash:

0.10 — 0.20 mm (0.0039 — 0.0079 in)

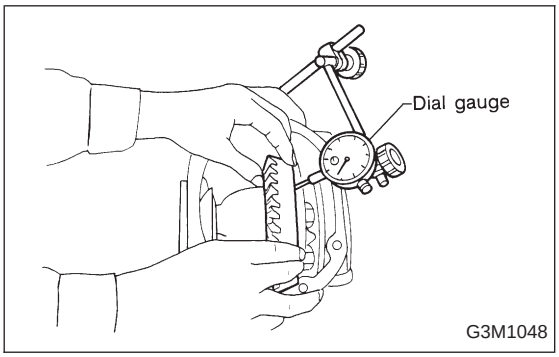

16) Check the crown gear runout on its back surface, and make sure pinion and crown gear rotate smoothly.

Limit of runout:

0.05 mm (0.0020 in)

17) Checking and adjusting tooth contact of crown gear

(1) Apply an even coat of red lead on both sides of three or four teeth on the crown gear. Check the contact pattern after rotating crown gear several revolutions back and forth until a definite contact pattern appears on the crown gear.

(2) When the contact pattern is incorrect, readjust according to the instructions given in “TOOTH CONTACT PATTERN”.

NOTE:
Be sure to wipe off red lead completely after adjustment is completed.

18) If proper tooth contact is not obtained, once again adjust the drive pinion height and the differential side bearing preload (mentioned above) and the hypoid gear backlash. <Ref. to 2).>

TOOTH CONTACT PATTERN		
Condition	Contact pattern	Adjustment
Correct tooth contact Tooth contact pattern slightly shifted towards toe under no load rotation. (When loaded, contact pattern moves toward heel.)	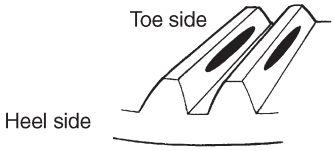 B3M0317A	—
Face contact Backlash is too large.	This may cause noise and chipping at tooth ends. 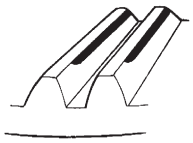 B3M0319	Increase thickness of drive pinion height adjusting shim in order to bring drive pinion closer to crown gear center. 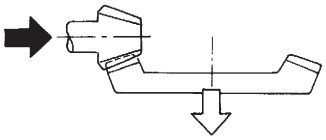 B3M0323
Flank contact Backlash is too small.	This may cause noise and stepped wear on surfaces. 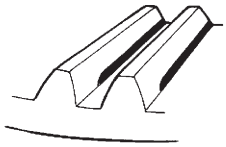 B3M0320	Reduce thickness of drive pinion height adjusting shim in order to move drive pinion away from crown gear. 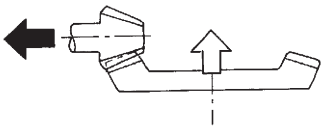 B3M0324
Toe contact Contact area is small.	This may cause chipping at toe ends. B3M0321	Adjust as for flank contact. 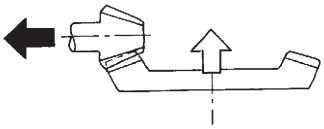 B3M0324
Heel contact Contact area is small.	This may cause chipping at heel ends. B3M0322	Adjust as for face contact. 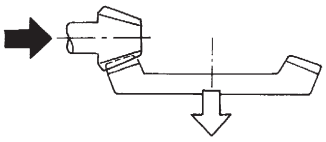 B3M0323

➡ : Adjusting direction of drive pinion
⇨ : Adjusting direction of crown gear

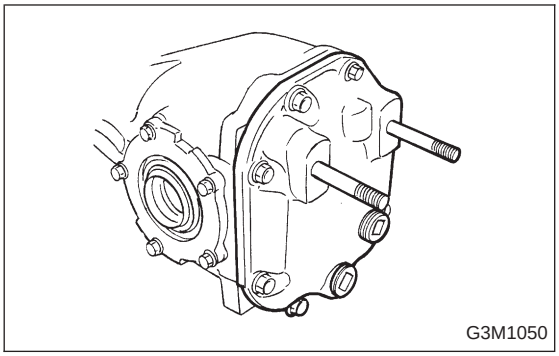

19) Install rear cover and tighten bolts to specified torque.

Tightening torque:
29±5 N·m (3.0±0.5 kg-m, 21.7±3.6 ft-lb)

F: INSTALLATION

To install, reverse the removal sequence.

1) Install the air breather cap tapping with a plastic hammer.

CAUTION:
Be sure to install new air breather cap.

2) Position front member on body by passing it under parking brake cable and securing to rear differential.
NOTE:
When installing rear differential front member, do not confuse the installation sequence of the upper and lower stoppers.

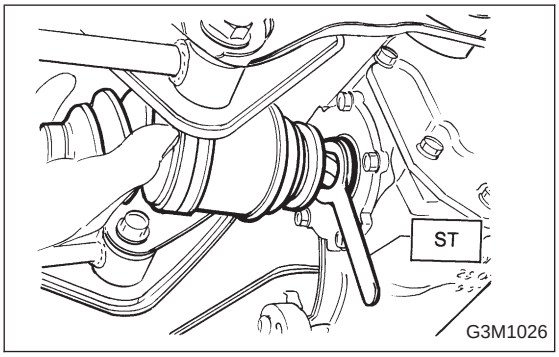

3) Install DOJ of rear drive shaft into rear differential. <Ref. to 3-4 [W2A2].>

ST 28099PA090 SIDE OIL SEAL PROTECTOR

4) Installing procedure hereafter is in the reverse order of removal.

5) After installation, fill differential carrier with gear oil to the upper plug level.

CAUTION:
Apply fluid packing to plug.

Fluid packing:
THREE BOND 1205 or equivalent

Oil capacity:
0.8 ℓ (0.8 US qt, 0.7 Imp qt)
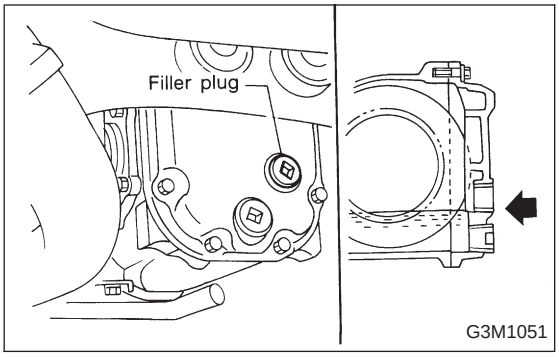
Tightening torque:
44±4 N·m (4.5±0.4 kg-m, 32.5±2.9 ft-lb)