7. Center Differential (AWD Model)

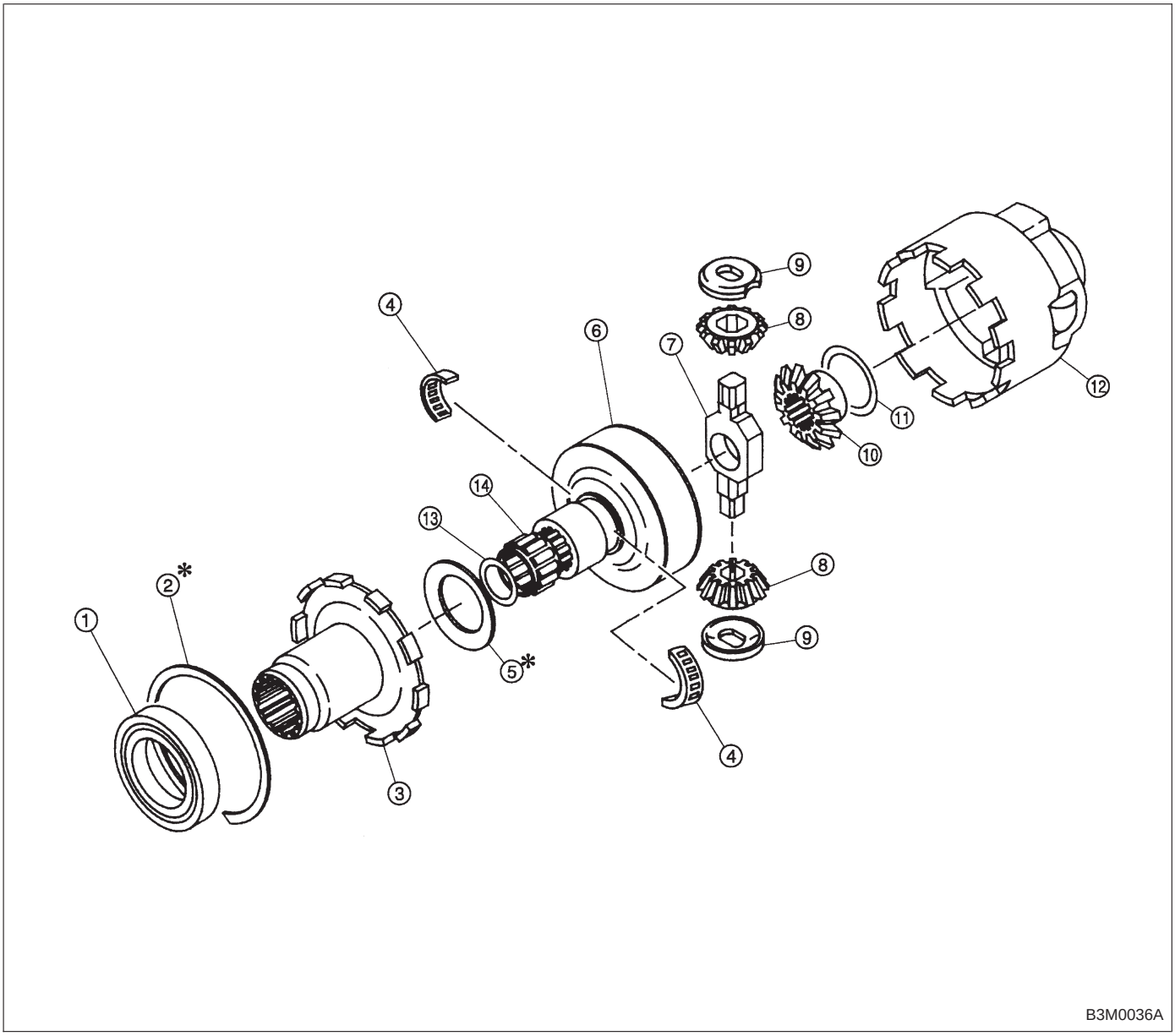

① Ball bearing
② Snap ring (Inner-110)
③ Center differential cover
④ Needle bearing
⑤ Adjusting washer
⑥ Viscous coupling
⑦ Pinion shaft
⑧ Differential bevel pinion
⑨ Retainer
⑩ Differential bevel gear
⑪ Washer
⑫ Center differential case
⑬ Snap ring
⑭ Roller bearing