5. Drive Pinion Assembly

1. AWD MODEL

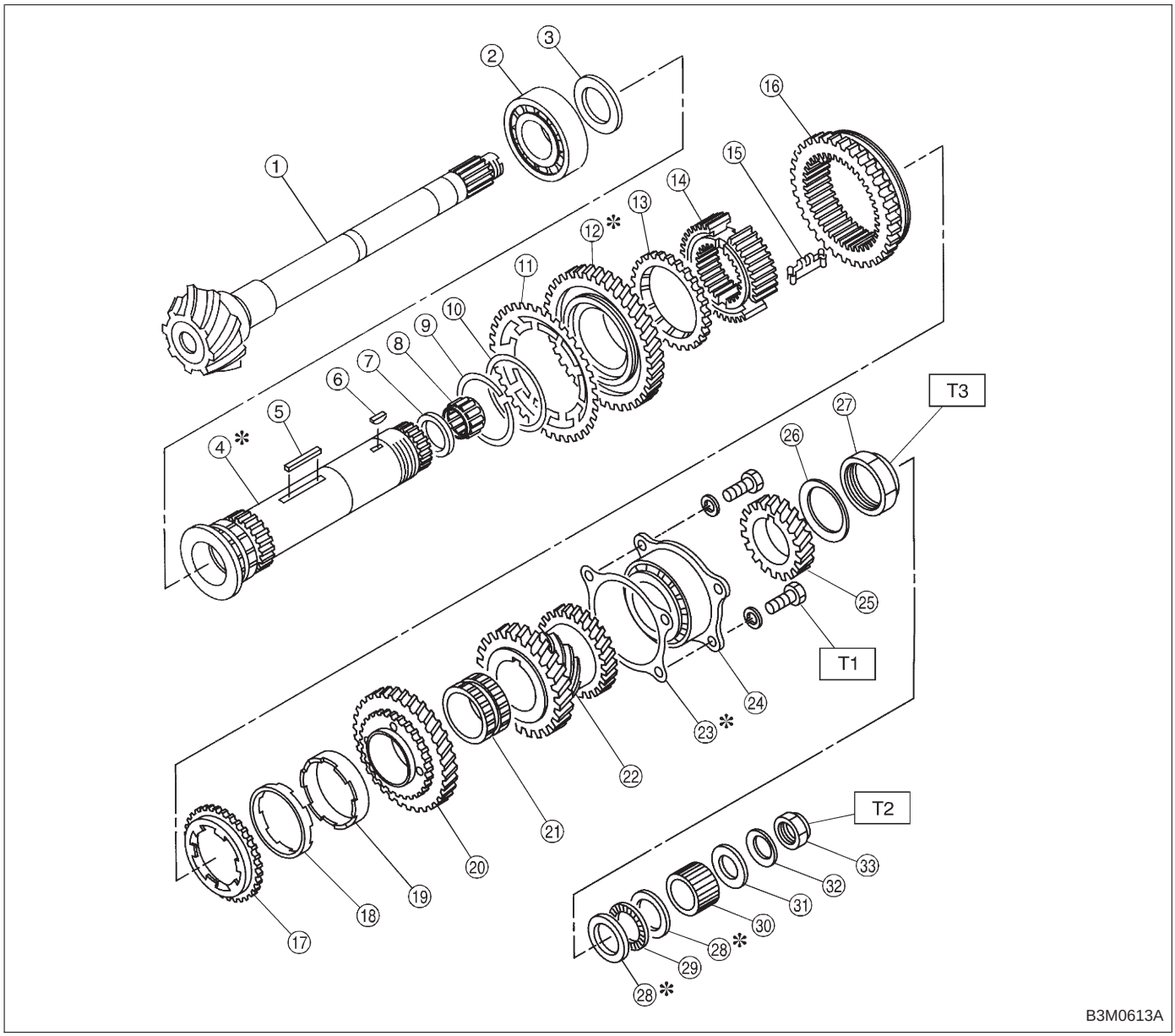

① Drive pinion shaft
② Roller bearing
③ Washer
④ Driven shaft
⑤ Key
⑥ Woodruff key
⑦ Drive pinion collar
⑧ Needle bearing
⑨ Snap ring (Outer)
⑩ Washer
⑪ Sub gear
⑫ 1st driven gear
⑬ Baulk ring
⑭ 1st-2nd synchronizer hub
⑮ Insert key
⑯ Reverse driven gear
⑰ Outer baulk ring
⑱ Synchro cone
⑲ Inner baulk ring
⑳ 2nd driven gear
㉑ 2nd driven gear bush
㉒ 3rd-4th driven gear
㉓ Driven pinion shim
㉔ Roller bearing
㉕ 5th driven gear
㉖ Lock washer
㉗ Lock nut
㉘ Washer
㉙ Thrust bearing
㉚ Differential bevel gear sleeve
㉛ Washer
㉜ Lock washer
㉝ Lock nut

Tightening torque: N·m (kg-m, ft-lb)
T1: 29±3 (3.0±0.3, 21.7±2.2)
T2: 118±8 (12.0±0.8, 86.8±5.8)
T3: 265±10 (27±1, 195±7)

2. FWD MODEL

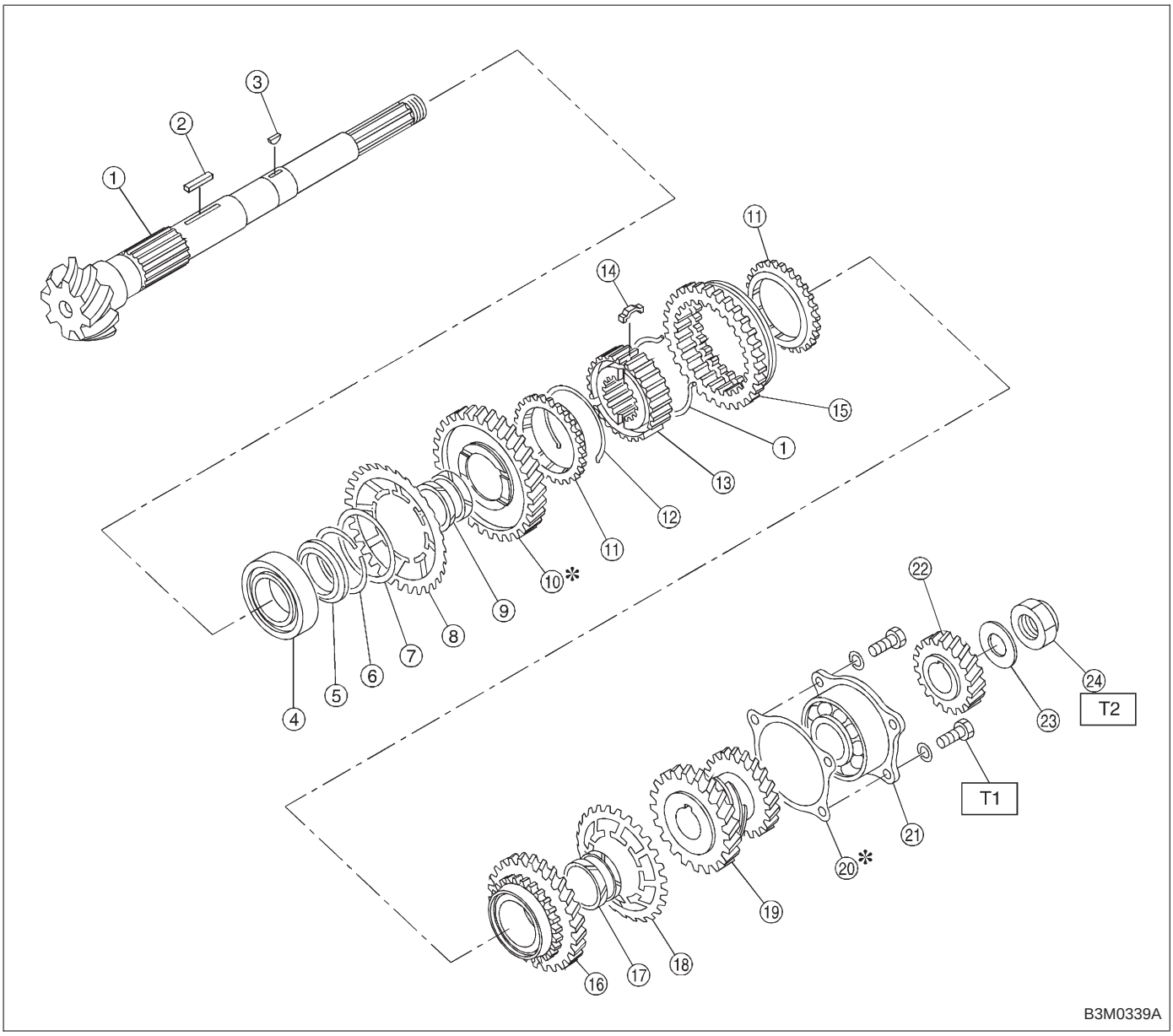

① Drive pinion shaft
② Key
③ Woodruff key
④ Roller bearing
⑤ 1st gear thrust plate
⑥ Snap ring (Outer)
⑦ Washer
⑧ 1st sub gear
⑨ 1st gear bushing
⑩ 1st driven gear
⑪ 1st-2nd baulk ring
⑫ 1st-2nd synchronizer spring
⑬ 1st-2nd synchronizer hub
⑭ 1st-2nd shifting insert
⑮ Reverse driven gear
⑯ 2nd driven gear
⑰ 2nd gear bushing
⑱ 2nd sub gear
⑲ 3rd-4th driven gear
⑳ Drive pinion shim
㉑ Ball bearing
㉒ 5th driven gear
㉓ Lock washer
㉔ Lock nut

Tightening torque: N·m (kg-m, ft-lb)
T1: 29±3 (3.0±0.3, 22±2)
T2: 118±6 (12.0±0.6, 86.8±4.3)