8. Front Differential

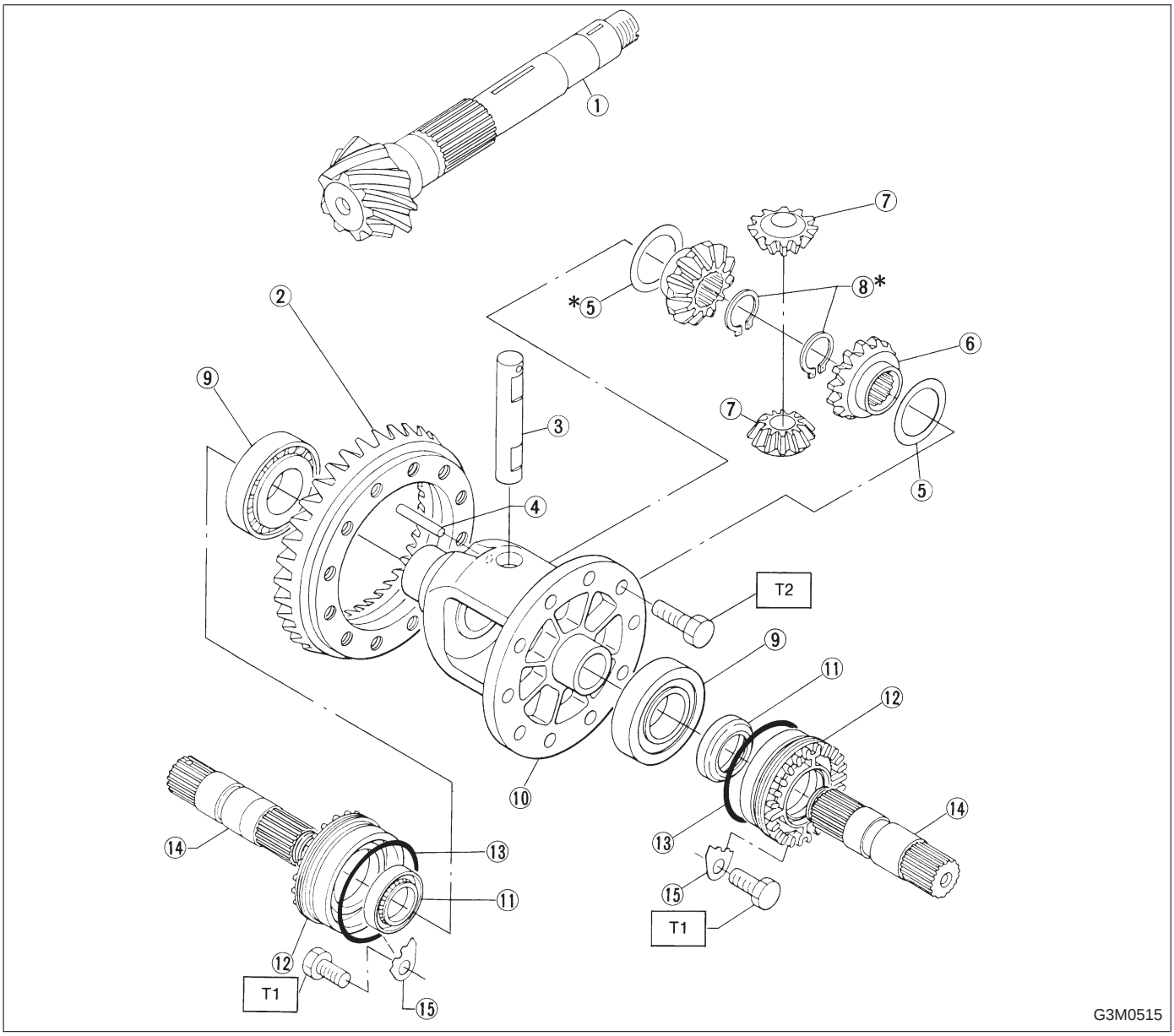

① Drive pinion shaft
② Hypoid driven gear
③ Pinion shaft
④ Straight pin
⑤ Washer
⑥ Differential bevel gear
⑦ Differential bevel pinion
⑧ Snap ring (Outer)
⑨ Roller bearing
⑩ Differential case
⑪ Oil seal
⑫ Differential side retainer
⑬ O-ring
⑭ Axle drive shaft
⑮ Retainer lock plate

Tightening torque: N·m (kg-m, ft-lb)
T1: 25±5 (2.5±0.5, 18.1±3.6)
T2: 62±5 (6.3±0.5, 45.6±3.6)