4. Shifter Fork and Shifter Rod

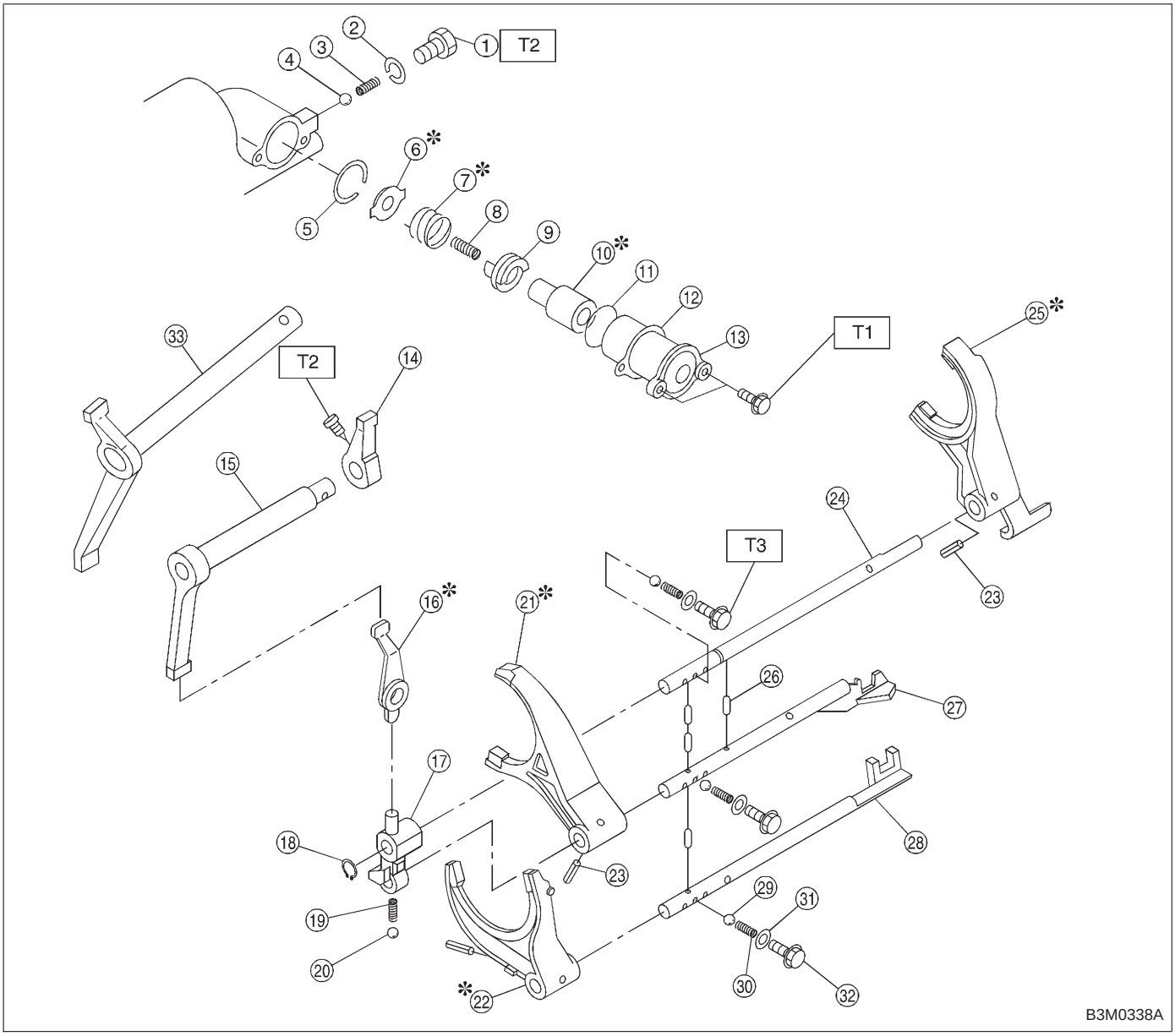

① Plug
② Gasket
③ Reverse accent spring
④ Ball
⑤ Snap ring (Inner)
⑥ Reverse check plate
⑦ Reverse check spring
⑧ Reverse return spring
⑨ Reverse check cam
⑩ Reverse accent shaft
⑪ O-ring
⑫ Adjusting select shim
⑬ Reverse check sleeve
⑭ Selector arm (AWD model)
⑮ Shifter arm (AWD model)
⑯ Reverse shifter lever
⑰ Reverse fork rod arm
⑱ Snap ring (Outer)
⑲ Spring
⑳ Ball
㉑ 3rd-4th shifter fork
㉒ 1st-2nd shifter fork
㉓ Straight pin
㉔ Reverse fork rod
㉕ 5th shifter fork
㉖ Interlock plunger
㉗ 3rd-4th fork rod
㉘ 1st-2nd fork rod
㉙ Ball
㉚ Checking ball spring
㉛ Gasket
㉜ Checking ball plug
㉝ Shifter arm (FWD model)

Tightening torque: N·m (kg-m, ft-lb)
T1: 6.4±0.5 (0.65±0.05, 4.7±0.4)
T2: 10±1 (1.0±0.1, 7.2±0.7)
T3: 19.6±1.5 (2.00±0.15, 14.5±1.1)