1. Transfer Case and Extension (AWD Model)

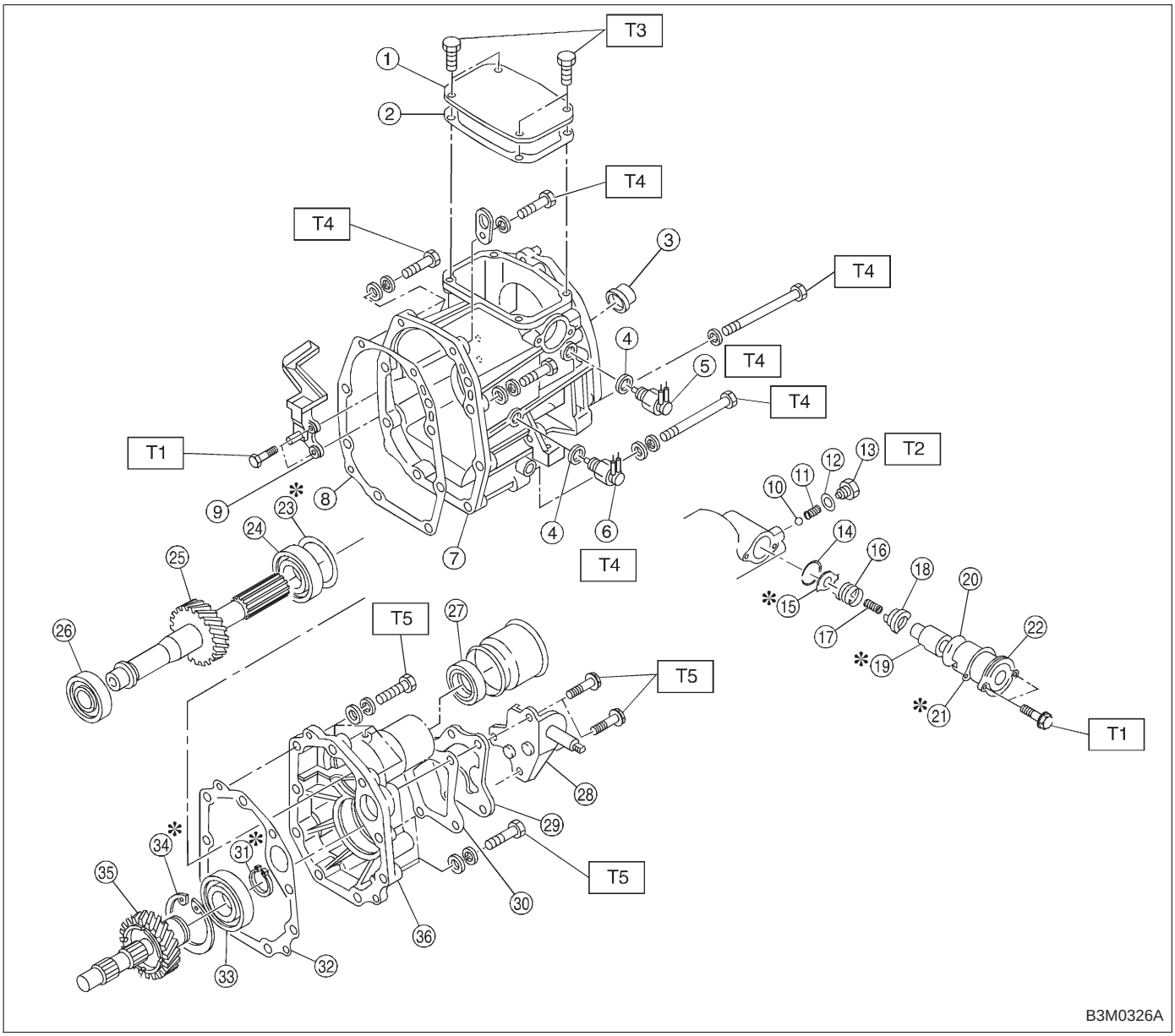

① Transfer cover
② Cover gasket
③ Oil seal
④ Gasket
⑤ Neutral switch
⑥ Back-up light switch
⑦ Transfer case
⑧ Gasket
⑨ Oil guide
⑩ Ball
⑪ Reverse accent spring
⑫ Gasket
⑬ Plug
⑭ Snap ring (Inner)
⑮ Reverse check plate
⑯ Reverse check spring
⑰ Reverse return spring
⑱ Reverse check cam
⑲ Reverse accent shaft
⑳ O-ring
㉑ Adjusting select shim
㉒ Reverse check sleeve
㉓ Adjusting washer
㉔ Ball bearing
㉕ Transfer driven gear
㉖ Ball bearing
㉗ Oil seal
㉘ Shift bracket
㉙ Extension cover
㉚ Gasket
㉛ Snap ring (Outer-30)
㉜ Gasket
㉝ Ball bearing
㉞ Snap ring (Inner-72)
㉟ Transfer drive gear
㊱ Extension

Tightening torque: N·m (kg-m, ft-lb)
T1: 5±1 (0.5±0.1, 3.6±0.7)
T2: 10±1 (1.0±0.1, 7.2±0.7)
T3: 15.7±1.5 (1.6±0.15, 11.6±1.1)
T4: 25±2 (2.5±0.2, 18.1±1.4)
T5: 37±3 (3.8±0.3, 27.5±2.2)