3. Transmission Case

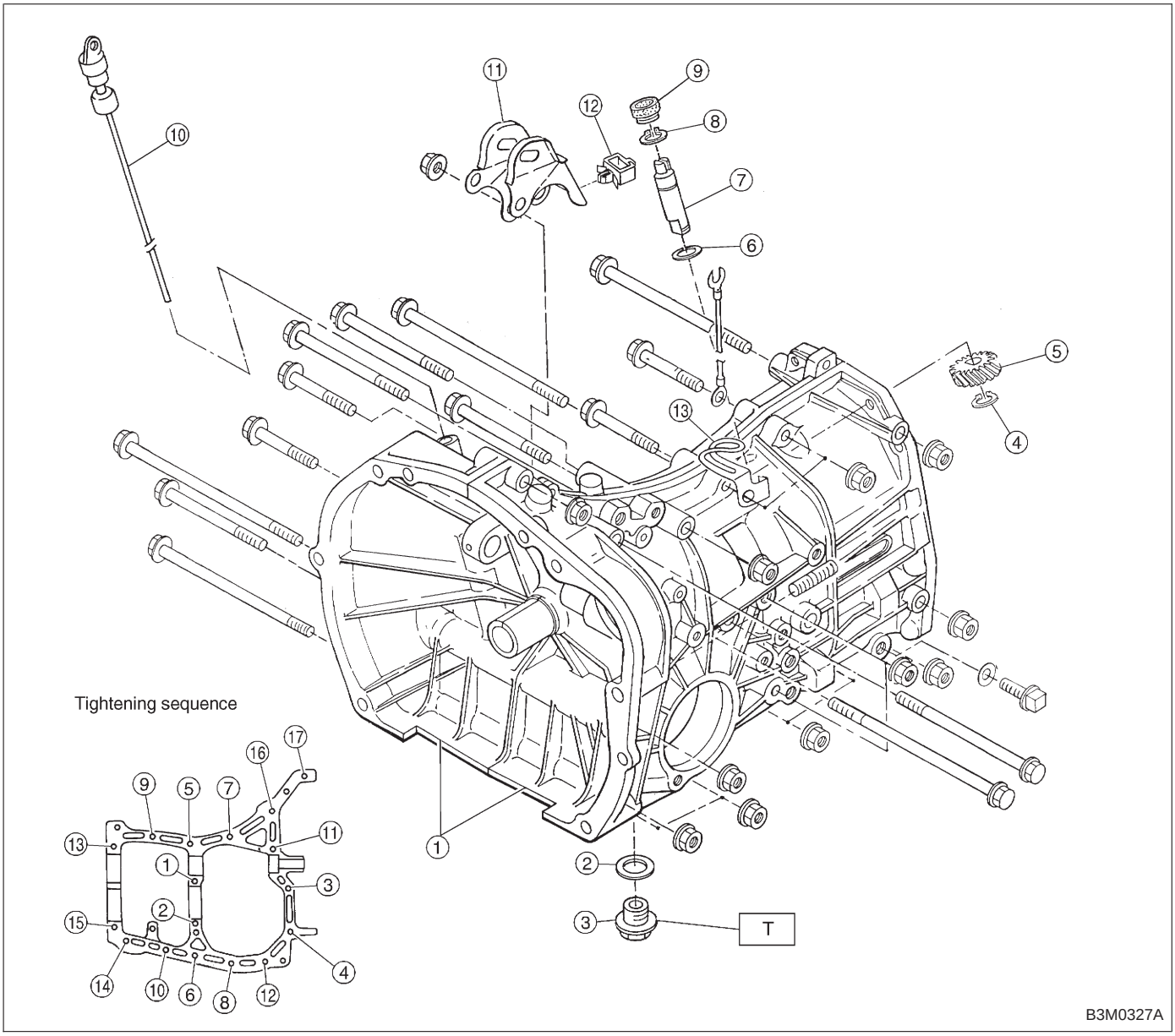

① Transmission case ASSY
② Gasket
③ Drain plug
④ Snap ring (Outer)
⑤ Speedometer driven gear
⑥ Washer
⑦ Speedometer shaft
⑧ Snap ring (Outer)
⑨ Oil seal
⑩ Oil level gauge
⑪ Pitching stopper bracket
⑫ Clamp
⑬ Clip

Tightening torque: N·m (kg-m, ft-lb)
T: 44±3 (4.5±0.3, 32.5±2.2)

Size	All models	Torque
8 mm bolt	⑤ — ⑮	25±2 N·m (2.5±0.2 kg-m, 18.1±1.4 ft-lb)
10 mm bolt	① — ④ ⑯ — ⑰	39±2 N·m (4.0±0.2 kg-m, 28.9±1.4 ft-lb)