8. Center Differential (AWD Model)

A: DISASSEMBLY

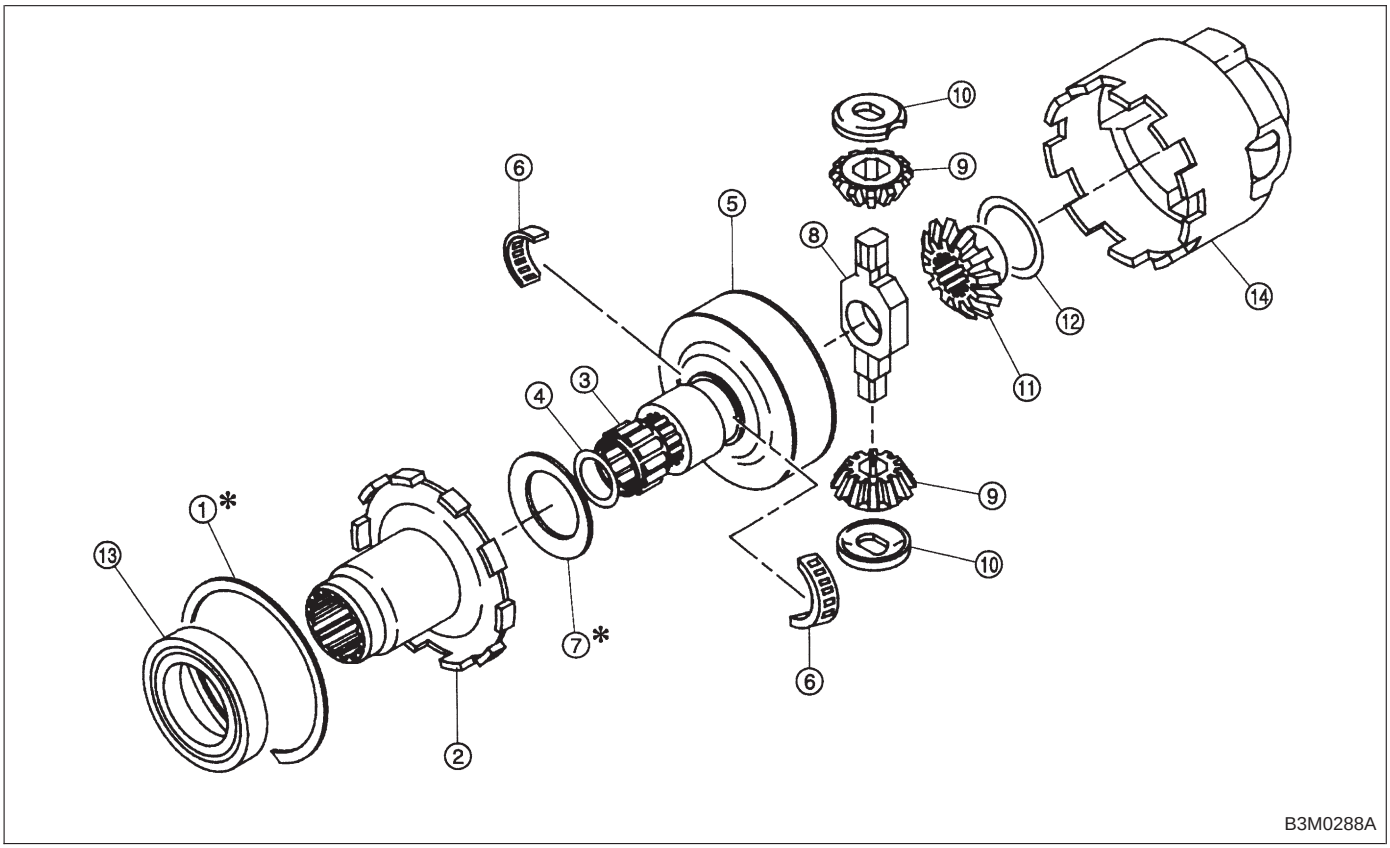

1) Remove snap ring ① (Inner-110) using flat bladed screwdriver.
2) Remove center differential cover ②.
3) Remove snap ring ④ and roller bearing ③.
4) Remove viscous coupling ⑤.
5) Remove needle bearings ⑥.
6) Remove adjusting washer ⑦ (45 x 62 x t).
7) Remove pinion shaft ⑧, bevel pinions ⑨ and retainers ⑩.
8) Remove side gear ⑪.
9) Remove thrust washer ⑫.

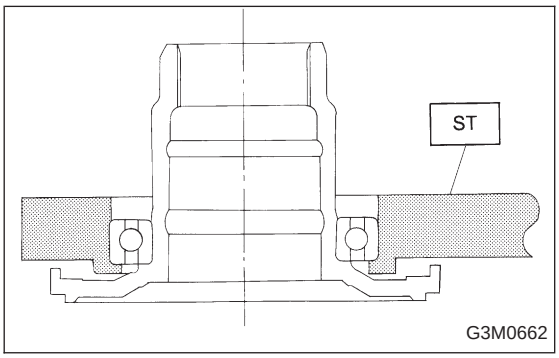

10) Remove ball bearing ⑬ using ST.

ST 498077300 CENTER DIFFERENTIAL BEARING REMOVER

CAUTION:
Do not reuse ball bearing.

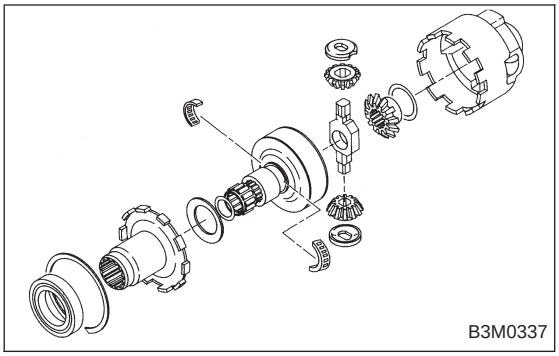

B: ASSEMBLY

Assembly is in the reverse order of disassembly.
Do the following:

- Install thrust washer with chamfered side of inner perimeter facing the side gear.
- Install adjusting washer with chamfered side of inner perimeter facing the viscous coupling using ST.

ST 499547300 INSTALLER SET

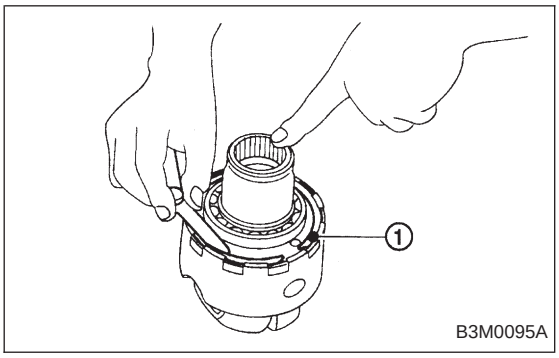

1) Selection of snap ring (Inner-110)

(1) After assembling, using a thickness gauge measure clearance between snap ring ① and center differential case.

Clearance:

0 — 0.15 mm (0 — 0.0059 in)

(2) If the measurement is not within the specification, select suitable snap ring.

Snap ring (Inner-110)	
Part No.	Thickness mm (in)
805100061	2.10 (0.0827)
805100062	2.21 (0.0870)
805100063	2.32 (0.0913)

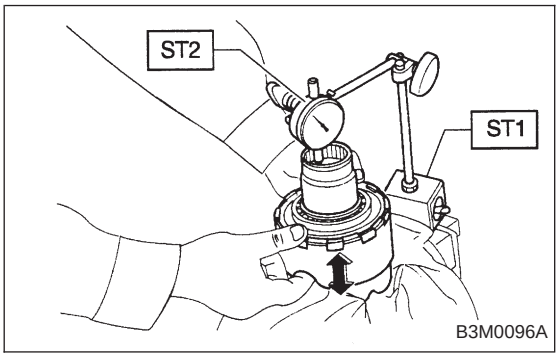

2) Selection of adjusting washer (Backlash adjustment)

(1) After assembling, set up a ST1 and ST2 to end of viscous coupling shaft. Move viscous coupling up and down, and measure backlash in the axial direction.

ST1 498247001 MAGNET BASE
ST2 498247100 DIAL GAUGE

Backlash:

0.62 — 0.86 mm (0.0244 — 0.0339 in)

(2) If the measurement is not within the specification, select suitable washer.

Adjusting washer (45 x 62 x t)	
Part No.	Thickness mm (in)
803045041	1.60 (0.0630)
803045042	1.80 (0.0709)
803045043	2.00 (0.0787)
803045044	2.20 (0.0866)
803045045	2.40 (0.0945)